ELISE 2011MY SERVICE PARTS LIST

(Toyota 1ZR/2ZR engine)

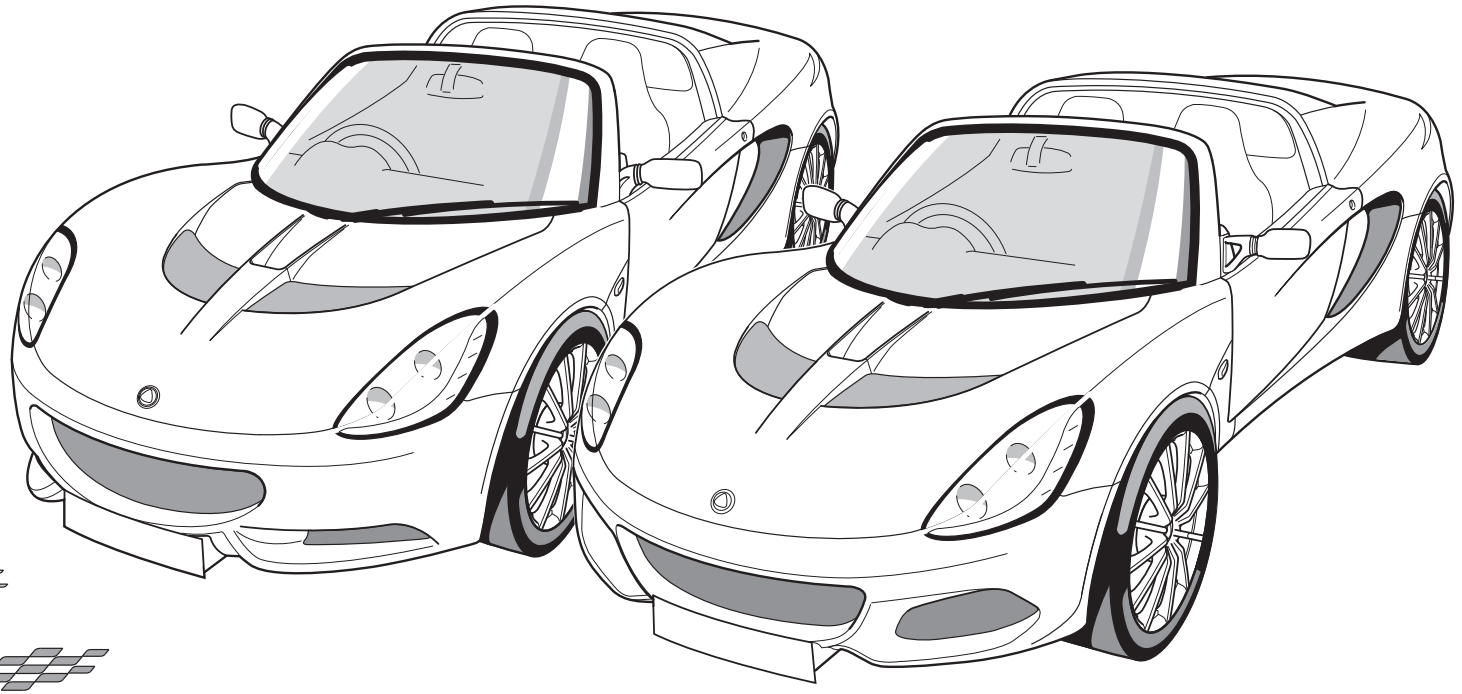

ELISE
R
SC
S
CR
S
SPORT 220
SPORT
SPRINT
SPRINT 220

2011 Model Year Onwards, includes limited editions
For Elise 2ZR Cup unique parts see A704T0355J

Technical Publications, Lotus Cars Ltd, Hethel, Norwich, Norfolk, NR14 8EZ. England.
Tel: +44 (0)1953 608000 www.lotuscars.com

© Lotus Cars Ltd. 2018

Part Number C120T0325J

Updated 2nd November 2018

ELISE

10.00 Body

10.01e	Body: Front & Rear Clamshells & Fixings, Elise 2011 MY
10.02a	Body: Sill Panels, Windscreen Frame & Rear Bulkhead
10.04	Crash Structures
10.09b	Front Services Access Panel, Elise 2011 MY
10.11c	Engine Cover Lid & Release Mechanism, Elise 2011 MY
10.13a	Engine Compartment Cover, Elise 2011 MY, 1ZR, 2ZR
10.15	Door Shells, Beams, Hinges
10.17	Door Latch Mechanism
10.20	Rear Window Shroud & Fixings
10.23	Bumpers, Valences Spoilers & Aerofoils
10.25a	Undertray & Diffuser, Elise 2011 MY
10.31	Towing Strut/ Hook

11.00 Glazing and Seals

11.01	Windscreen, Door Glass, Seals & Weather Strips
11.02	Door Window Lift Mechanism

12.00 Exterior Fittings

12.01	Wheelarch Liners
12.02	Soft Top Roof, Cant Rails, Roof Bows
12.02c	Dust and Shower Covers
12.03a	Grilles and Louvres, Elise 2011 MY
12.04	Roof Panel, Seals & Fixings
12.05a	Decals, Badges & Protective Film, Elise 2011 MY
12.07a	Licence Plate Mountings, Elise 2011 MY
12.09	Exterior Driving Mirrors

13.00 Seats & Seat Belts

13.01	Seat Runners
13.02	Seat Assemblies, front
13.27	Seat Belts, front

14.00 Pedal Box & Fascia

14.01a	Pedal Box, Pedals, Electronic Throttle Control
14.03	Footrests
14.05b	Fascia Structure & Supporting Hardware, Twin Airbag
14.10	Instrument Cowling/Binnacle

15.00 Interior Trim

15.05	Interior Driving Mirror & Sunvisors
15.11	Interior Trim & Stowage Provision
15.13	Front Door Trims
15.18	Interior Trim, Chassis Trim Panels
15.19	Centre Tunnel Trim, Gear Lever Gaiters/Shrouds
15.24	Luggage Compartment Carpet
15.30	Carpeting & Mats

16.00 Sound Insulation

16.01	Passenger Compartment Sound Insulation

17.00 Electrical

17.01	Harnesses, Leads
17.03	Horn, Inertia Switch, Modules, Fuses & Relays
17.05	Interior Switches, Auxiliary Power Socket
17.06	Engine Management & Sensors
17.06b	SIR Inflator Modules
17.07	Instruments, Tell Tales, & Displays
17.11a	Exterior Lamps, Except Headlamps, Elise 2011 MY
17.13a	Headlamps, Elise 2011 MY
17.17	Interior Lamps
17.21	Windscreen Wiper Motor, Wipers & Washers
17.27	In Car Entertainment

ELISE

17.31	Battery, Clamps & Cables
17.32	Lithium Battery, Clamps & Cables
17.33b	Security Alarm System, PFK, Parking Sensors & Camera
17.33c	Security Alarm System, Gemini, Parking Sensors & Camer

18.00 Heating, Ventilation, Air Conditioning

18.01	Heater/ Air Conditioning Assemblies, Housings
18.03	AC Components, Pipes, Hoses
18.05	Heater, Pipes, Hoses
18.07a	AC Interior Blower Motor
18.09a	AC/Heater Driver Operated Controls
18.12	AC/Heater Air Distribution Plenum
18.13	Air Trunking, Ducts & Ventilators
18.14	AC Air Recirculation System
18.15	Auxillary AC Unit

19.00 Labels & Literature

19.01	Labels,Certificates, Literature etc.
19.03	Owner's Handbooks & Service Notes Manuals

30.00 Chassis

30.01	Chassis, Subframes
30.02	Seat Belt Mounting Frames, Stays

31.00 Suspension

31.01	Front Suspension, Incl. Hubs
31.03	Rear Suspension, Incl. Hubs

32.00 Steering

32.01	Rack & Pinion, & Lower Column
32.05	Upper Column, Steering Wheel

33.00 Brakes

33.01	Brake Discs, Calipers, & Parking Brake Assembly
33.03	Master Cylinder, Servo, ABS Controller, Pipes & Hoses
33.05	Parking Brake Mechanism

34.00 Wheels & Tyres

34.01b	Wheels, Tyres & Valves, Elise 2011 MY

40.00 Engine

40.00b	Engine Assemblies
40.01d	Engine Block, Elise 2011 MY, 1ZR, 2ZR
40.01e	Engine Mounts, Elise 2011 MY, 1ZR, 2ZR
40.02f	Gaskets/Sealants, Top O/haul Set, Elise 2011 MY,1ZR,2Z
40.02g	Gaskets/Sealants, Engine Set, Elise 2011 MY, 1ZR, 2ZR
40.03c	Sump Assembly, Elise 2011 MY, 1ZR, 2ZR
40.05c	Cylinder Head , Valves, Springs, Elise 2011 MY, 1ZR, 2ZR
40.07e	Camshafts, Tappets, Cam Cover, Elise 2011 MY, 1ZR, 2Z
40.08b	Camshaft, Chain & Sprockets, Elise 2011 MY, 1ZR, 2ZR
40.09c	Pistons, Con-rods, Liners, Elise 2011 MY, 1ZR, 2ZR
40.11c	Crankshaft, Bearings, Flywheel, Elise 2011 MY, 1ZR, 2ZR
40.13c	Water Pump Assy. Thermostat, Elise 2011 MY, 1ZR, 2ZR
40.15d	Lubrication System, Elise 2011 MY, 1ZR, 2ZR
40.17c	Ignition System, S/plugs & Coils, Elise 2011 MY, 1ZR, 2ZR
40.19c	Alternator and Starter Motor, Elise 2011 MY on, 1ZR, 2ZR
40.21d	Exhaust Manifold, Elise 2011 MY on, 1ZR, 2ZR
40.23c	AC Compressor, Elise 2011 MY on, 1ZR, 2ZR

41.00 Belts and Pulleys

41.03c	Auxiliary Drive Belts & Pulleys, Elise 2011 MY, 1ZR, 2ZR

42.00 Induction Systems

42.01	Airboxes, Trunking & Air Filters
42.04b	Throttle Body & IAC Valve, Elise 2011 MY, 1ZR, 2ZR

Updated 3rd April 2017

ELISE

42.05b	Fuel Injection System, Elise 2011 MY, 1ZR, 2ZR
42.07e	Inlet Manifold, Plenum & gaskets, Elise 2011 MY, 1ZR
42.10	Supercharger Intercooler

43.00 Emission Equipment

43.03	Vacuum System, Hoses, Pipes & Fittings

44.00 Fuel System

44.01	Fuel Tanks, Filler
44.03	Fuel Pump; Filter, Pipes
44.05	Charcoal Canister & Evaporative Loss System.

45.00 Exhaust

45.01	Exhaust System
45.05b	Heatshields, Elise 2011 MY, 1ZR, 2ZR

46.00 Cooling

46.01	Engine Cooling System & Fan
46.01d	Engine Cooling System Elise 2011 MY 1ZR, 2ZR
46.04	Front Ducts
46.07	Single Oil Cooler System Engine
46.11	Chargecooler, Pipes & Hoses

47.00 Transmission

47.01c	Clutch & Release Mechanism, Elise 2011 MY, 1ZR, 2ZR
47.03a	Transmission Assembly, Elise 2011 MY, 1ZR , 2ZR
47.05	Gearchange Mechanism, External
47.05b	Gearchange Mechanism, External, Exposed Gearshift
47.06b	Selector Mechanism, Internal, Elise 2011 MY, 1ZR, 2ZR
47.07b	Gears, Shafts & Bearings, Elise 2011 MY, 1ZR, 2ZR
47.11a	Final Drive & Bearings, Elise 2011 MY, 1ZR, 2ZR
47.15a	Driveshafts & Seals, Elise 2011 MY, 1ZR, 2ZR

60.00 Special tools

60.01	Tool Kit
60.01a	Diagnostic Equipment
60.02	Special Tools
60.03	Fire Extinguisher, Gulf States

80.00 Bulk Items

80.20a	Touch-in Paint Pencil Range

Updated 1st May 2018

ELISE

42.05b	Fuel Injection System, Elise 2011 MY, 1ZR, 2ZR
42.07e	Inlet Manifold, Plenum & gaskets, Elise 2011 MY, 1ZR
42.09b	Supercharger 2ZR

43.00 Emission Equipment

43.03	Vacuum System, Hoses, Pipes & Fittings

44.00 Fuel System

44.01	Fuel Tanks, Filler
44.03	Fuel Pump; Filter, Pipes
44.05	Charcoal Canister & Evaporative Loss System.

45.00 Exhaust

45.01	Exhaust System
45.05b	Heatshields, Elise 2011 MY, 1ZR, 2ZR

46.00 Cooling

46.01	Engine Cooling System & Fan
46.01d	Engine Cooling System Elise 2011 MY 1ZR, 2ZR
46.04	Front Ducts
46.07	Single Oil Cooler System Engine
46.11	Chargecooler, Pipes & Hoses

47.00 Transmission

47.01c	Clutch & Release Mechanism, Elise 2011 MY, 1ZR, 2ZR
47.03a	Transmission Assembly, Elise 2011 MY, 1ZR , 2ZR
47.05	Gearchange Mechanism, External
47.05b	Gearchange Mechanism, External, Exposed Gearshift
47.06b	Selector Mechanism, Internal, Elise 2011 MY, 1ZR, 2ZR
47.07b	Gears, Shafts & Bearings, Elise 2011 MY, 1ZR, 2ZR
47.11a	Final Drive & Bearings, Elise 2011 MY, 1ZR, 2ZR
47.15a	Driveshafts & Seals, Elise 2011 MY, 1ZR, 2ZR

60.00 Special tools

60.01	Tool Kit
60.01a	Diagnostic Equipment
60.02	Special Tools
60.03	Fire Extinguisher, Gulf States

80.00 Bulk Items

80.20a	Touch-in Paint Pencil Range

Updated 3rd April 2017

FOREWORD

This publication has been designed for use by Lotus Dealers, and may be updated periodically by the issuing of update packages to the dealer network. Lotus policy is one of continuous product improvement and the right is reserved to alter specifications at any time without prior notice.
Whilst every care has been taken to ensure correctness of information, it is impossible to guarantee complete freedom from omissions and errors, or to accept liability arising from such errors or omissions, but nothing herein contained shall affect your statutory rights.

USE OF THE PARTS LIST

This parts list covers the Toyota 1ZR, 2ZR powered Elise & Exige range, 2011 model year onwards. The manual is arranged in function groups, as defined by the Contents page, and may sometimes use several versions of the same function group to accomodate model variations - take care to establish the full vehicle specification in order to properly identify the applicable parts list section.

PART NUMBERS

Part numbers used in this publication are in the format as follows:

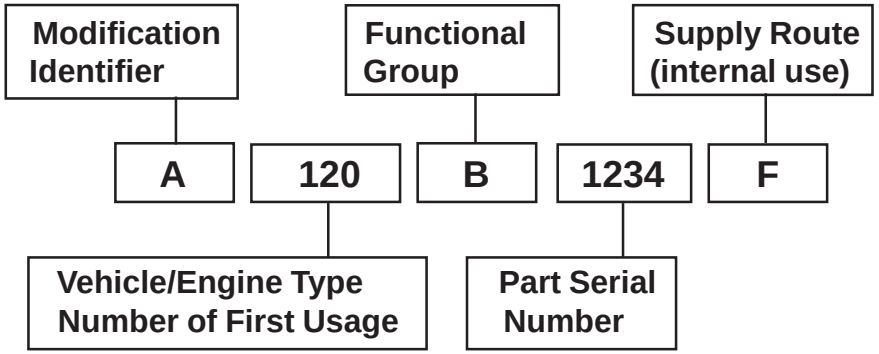

Modification Identifier: This letter identifies a version or modification of the part. Part numbers with different prefix letters may or may not be interchangeable - refer to the remarks and option columns.

Vehicle/Engine Type Number: The type number indicates either the model or engine type on which the part was first used.

026, 036, 045, 500....Elan	083....Elite S2	117....Elise 2 (Rover)	127....2-Eleven	702....Exige V6 Cup	918....V8 3.5 turbo
050....Elan+2	084....Eclat S2	117....Elise 2001 MY	128....Exige S (euro)	704....Elise C	920....4 cyl. 2.0 turbo
046, 054, 065, 074....Europa	085....Esprit S3	120....Elise111R	129....Exige S (fed)	708....3 Eleven	
075....Elite S1	089....Excel	121....Elise USA	131....Elise S (1ZZ)	710....Evora 430	
076....Eclat S1	100....Elan 1990	122....Exige 2	132....Evora	907....4 cyl. 2.0 NA	
079....Esprit S1/S2/S2.2	111....Elise	123....Exige USA	138....Exige V6	910....4 cyl. 2.2 turbo	
082....Esprit Turbo	340....340R	124....Europa 2006	147....Elise 17.5 MY	912....4 cyl. 2.2 NA	

Functional Group: A single letter indicating the functional area of the parts first use

A = Chassis	E = Engine	J = Brakes	P = Heater & AC	U = Hard Trim
B = Body	F = Transmission	K = Cooling	Q = Clutch	V = Soft Trim
C = Front Suspension	G = Wheels & Tyres	L = Fuel System	R = Final Drive	W = Standard Fixings
D = Rear Suspension	H = Steering	M = Electrics	S = Exhaust	

Updated 1st October 2018

VEHICLE IDENTIFICATION NUMBER & ENGINE NUMBER

The Vehicle Identification Number (V.I.N.) is located on the left hand side of the windscreen and stamped on the chassis in the right hand front wheelarch area, viewable with the front wheels turned to full right lock, and is also printed on a label stuck to the chassis sideframe alongside the driver's seat..

The engine number is marked on a vertical patch at the right hand side of the rear face of the cylinder block, adjacent to the clutch housing.

Both numbers should always be quoted with any vehicle enquiries, as Factory records are filed against V.I.N., and specification change points are identified by V.I.N. or engine number. The vehicle licence number should be considered irrelevant, since it may not accurately reflect the vehicle age, and may also be changed during the car's life.

The V.I.N. comprises 17 characters, coded in accordance with European Economic Community (EEC) directives. For change point identification in Service Notes and Service Parts Lists, characters 10 (model year) and 15 - 17, or 14 - 17 (serial number) will be quoted

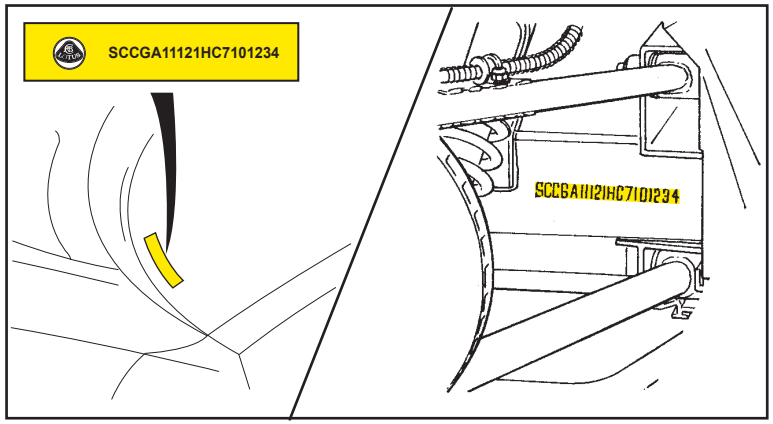

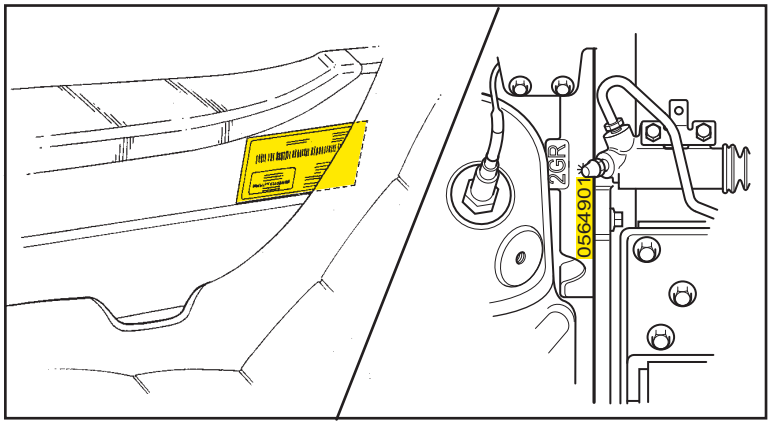

SOP to 2013 M.Y.serial no. 0275

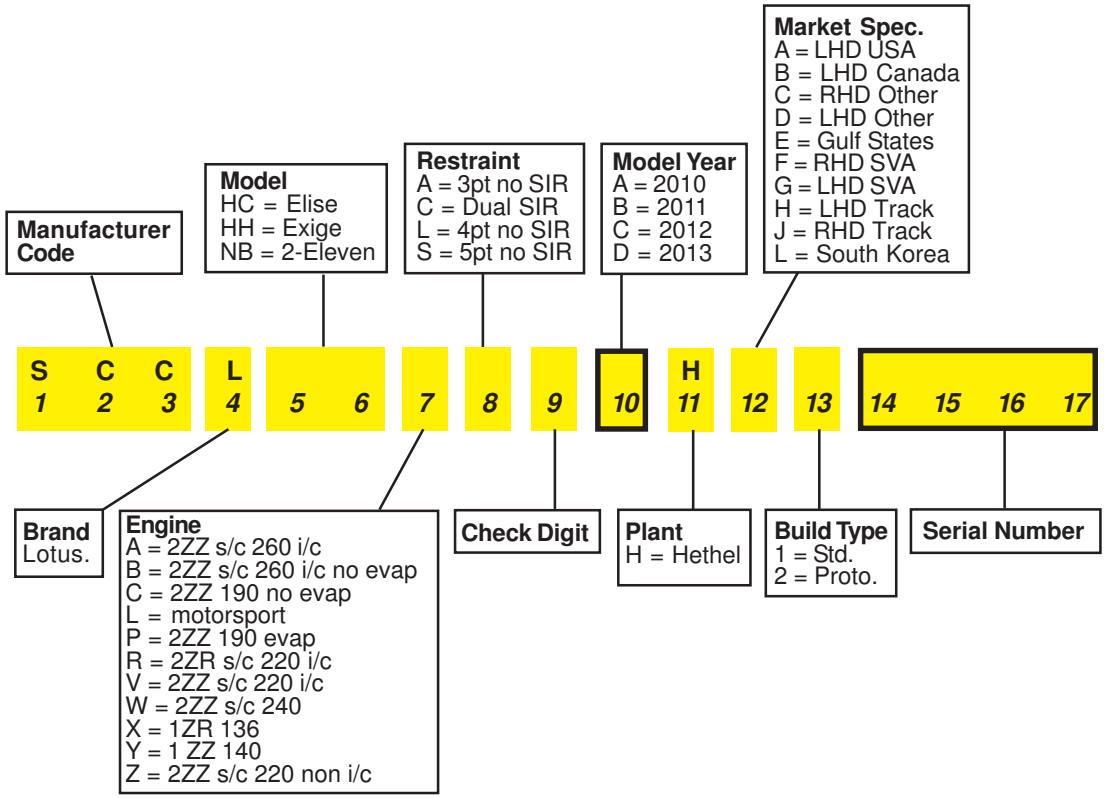

2013 M.Y. serial no. 0276 to 2014 M.Y.

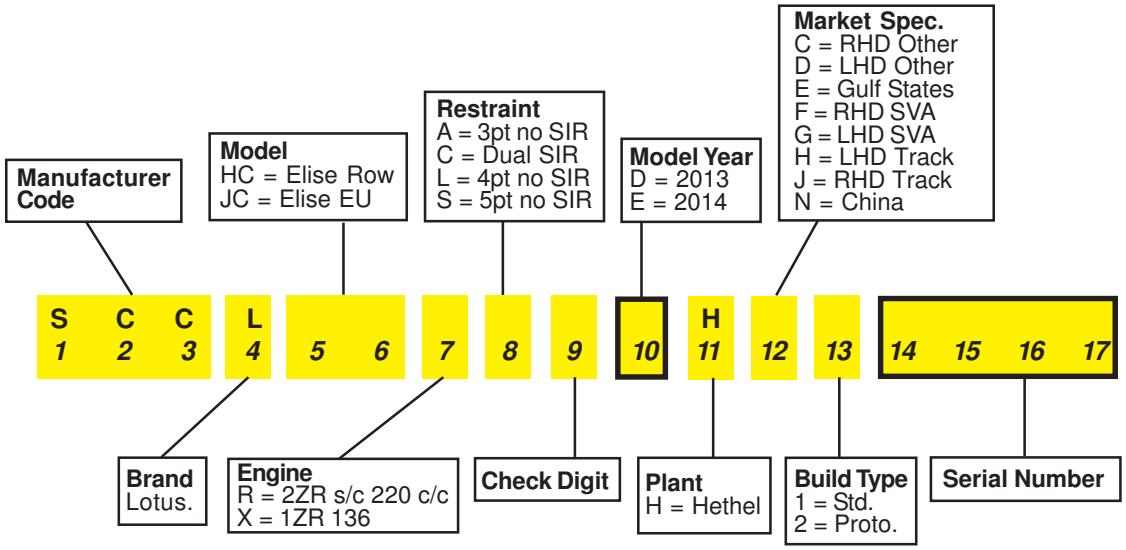

2015 M.Y.to 2016 M.Y.

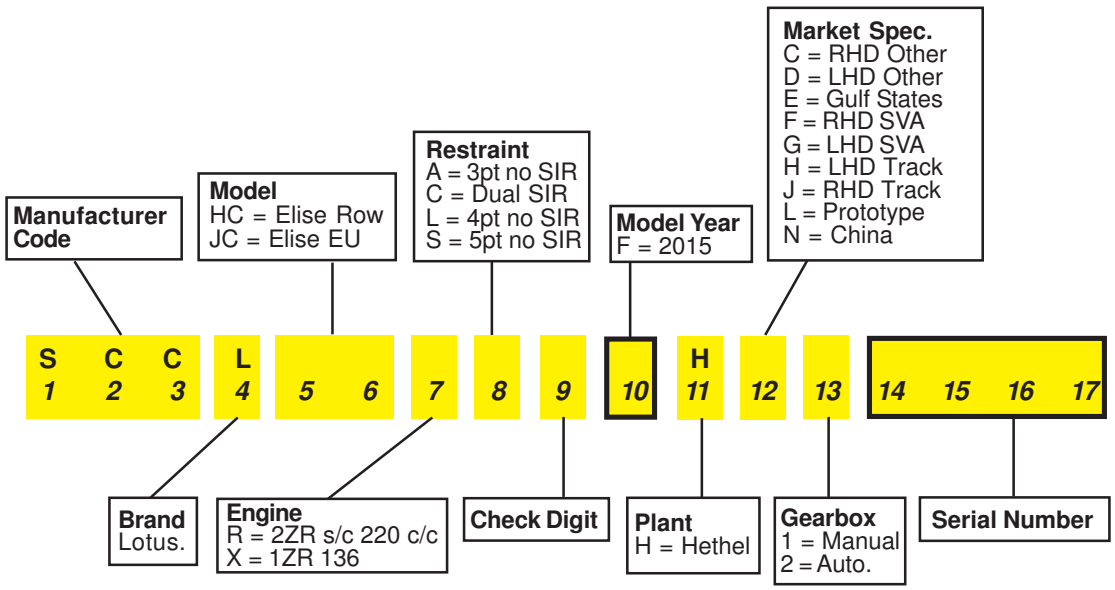

2017 M.Y. onwards

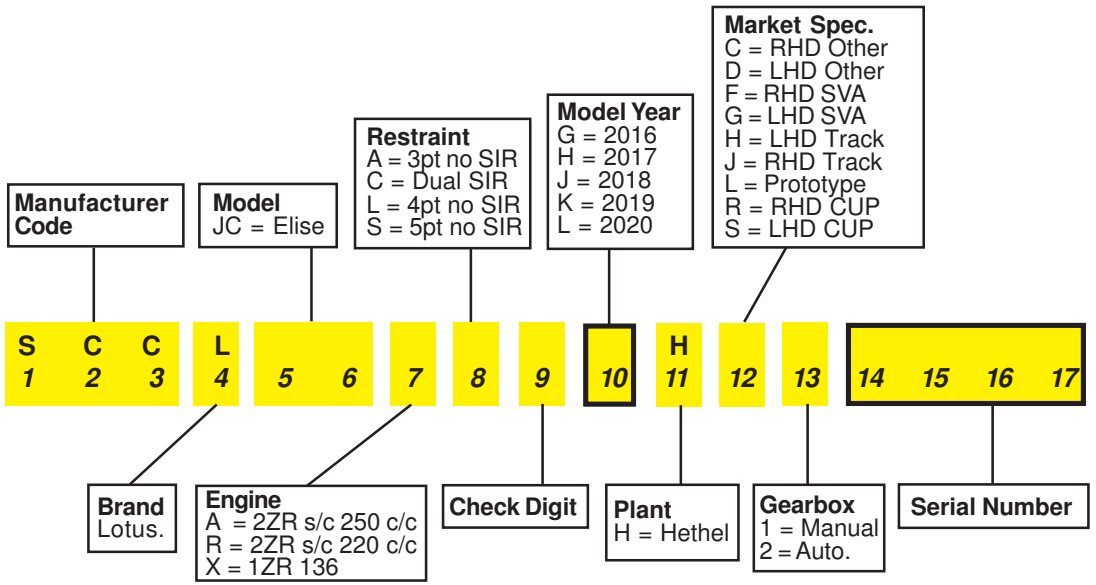

ELISE

Updated 1st August 2017

March 2010 Elise 2011MY

Feb 2011 Club Racer

June 2012 S

Oct 2012 S Club Racer

Jan 2014 Cup R

Nov 2014 S Cup/220 Cup

March 2015 20th

Nov 2015 Sport

Nov 2015 Sport 220

June 2016 Cup 250

July 2016 Race 250

Oct 2016 250 50th

Updated 5th March 2018

April 2017 17.5MY Sport/Sprint

April 2017 17.5MY Sport 220/Sprint 220

June 2017 17.5MY Cup 250

Dec 2017 Cup 260

Jan 2018 CUP 250 GP

May 2018 Sport 220 EVO

Updated 30th July 2018

MODEL HISTORY MILESTONES

2011 M.Y. Introduction: March 2010 (final '10 cars: Elise 567; Exige 333; 2-Eleven 35; USA Elise 35; Exige 60)
VIN character 10 = B. VIN serial number restarts at 0001.
Exige range unchanged. Changes to Elise range include: Revised front body with enlarged oil cooler intake ducts and chin spoilers, restyled radiator outlet ducts, one-piece lift out access cover, aluminium mesh grilles, separate rear transom panel without faux end grilles, new diffuser. New headlamp units incorporating LED turn lamps and LED daytime running lamps.
New 12-spoke cast roadwheels, or new 5-'Y' spoke forged wheels. Elise S model replaced with 1.6 ltr, 1ZR FAE engine, featuring inlet and exhaust cam VVT-i, and VALVEMATIC inlet valve lift control, Lotus T6 controller; new 6-speed type EC60 transmission; revised rear subframe; optional cruise control.

Introduction of Lotus Dynamic Performance Management (Lotus DPM)
Introduced at VIN BH_10931 in September 2010 for Elise with1ZR powertrain only. Kelsey Hayes ABS system replaced with Bosch ABS modulator incorporating electronic stability control referred as Lotus Dynamic Performance Management and HBA (Hydraulic Brake Assist). Revisions to tell tale lamps include addition of side light tell-tale, cruise control tell-tale (previously located on centre console) Lotus DPM tell-tales and revised functionality of coolant temperature tell-tale and LCD display.

Elise CR (Club Racer): February 2011
Based on 1ZR powertrain for Europe and some ROW territories. Introduced as the entry level variant to the Elise range. Increased power to weight ratio over standard 1.6 Elise by deletion of certain standard factory fitted components such as carpets, radio and speakers, passenger footrest, central locking, mudflaps, NVH material and soft top roof (shower cover supplied). Lightweight battery fitment with isolator switch available to replace standard battery. Additional customer optional delete of airbag and pyrotechnic seat belt system as well as Dealer option fit of lighter weight forged wheels and 'power pack' consisting of TRD airbox, high flow filter and level 1 sports exhaust. A 'Sport' mode button is fitted as standard and located in the centre console opposite Lotus DPM switch. Sports suspension fitted as standard with adjustable yellow Anti-Roll bar.

Available in Saffron Yellow B106, Ardent Red C94, Sky Blue C124, Aspen White C113, Carbon Grey B137 & Matt Black B141. The CR is fitted with a 'Black Style Pack' as standard, which includes a matt black finish to the roll hoop cover, the rear transom panel and door mirror covers.

Elise CR logos R/H rear clamshell & LH/RH front clamshell above the side repeaters, top of roll hoop cover & door interior. A rear 'LOTUS' decal replaces the rear 3D 'LOTUS' badge but still uses the standard Lotus logo nose badge. Body coloured seats, with SuedeTex pads, body coloured painted centre console with the Elise CR decal. Matt black radio blanking panel with CR decal. SuedeTex trim to door inserts, handbrake/gearlever gaiter and elements of the steering wheel (including steering wheel centre if airbag delete option selected).
See Technical Service Bulletin 2011/09 for full details

Elise S: June 2012
Introduced at VIN CH_10205 VIN character 7 engine type = R (2ZRFE engine, supercharged with I.C. - 162.5Kw). ***ENGINE:*** Fitted with type 2ZR-FE 4 cylinder engine 1.8 litre features dual Variable Valve Timing - intelligent (VVT-i) The engine is uprated by the fitment of a Magnuson R900 supercharger (utilising Eaton TVS Technology TM) with an integral air to water charge cooler and inlet manifold. ***COOLING:*** The charge cooler system utilises its own dedicated coolant circuit with a coolant reservoir mounted on the left hand side of the engines cylinder head. Charge cooler coolant is circulated to a single front mounted coolant/air cooler radiator positioned ahead of the left hand front road wheel. Additional engine oil cooling is provided with the fitment of a single front mounted oil/air cooler radiator positioned ahead of the right hand front road wheel. ***TRANSMISSION:*** The Elise S utilises the same Toyota sourced EC60 transmission assembly as used on the Elise 1.6, but is fitted with a higher rated clutch centre plate to accommodate the increased torque. ***SUSPENSION:*** is unchanged from the Elise 1.6 litre, with uprated springs and dampers available with the selection of the 'Sports' pack option. Also included within the 'Sports' pack option are the latest forged, 7 'Y' spoke 6.0J x 16 front and 8.0J x 17 rear wheels available in either silver or black specifically developed for the introduction of the Elise S. ***ELECTRICAL:*** An additional USB 5 volt DC charging port (if fitted) is located in the passenger storage pocket. FUEL: An uprated 4 bar fuel pump is fitted to ensure that an adequate delivery of fuel to the injectors is available under high engine torque/demand scenarios.
See Technical Service Bulletin 2012/07 for full details.

2012MY Elise S CR (Club Racer): October 2012
Based on 2ZR powertrain for Europe and some ROW territories. Introduced as the entry level variant to the Elise S range. Increased power to weight ratio over standard 1.8 Elise by deletion of certain standard factory fitted components such as carpets, radio and speakers, passenger footrest, central locking, mudflaps, NVH material and soft top roof (shower cover supplied).

Exterior: Body as per standard Elise S, but only available in 6 colours; Toxic Green C173, Formula Red C168, Daytona Blue C169, Aspen White C113, Carbon Grey C137 and Chrome Orange C171. S CR decals to rear transom and LH/RH front clamshell above the side repeaters. A rear 'LOTUS' decal replaces the rear 3D 'LOTUS' badge but still uses the standard Lotus logo nose badge.

The S CR is fitted with a 'Black Style Pack' as standard, which includes a matt black finish to the roll hoop cover, the rear transom panel and door mirror covers.

Interior: Body coloured seats, with SuedeTex pads with S CR decal embroidered on headrests, body coloured painted centre console with the Elise S CR decal. Matt black radio blanking panel with CR decal. SuedeTex trim to door inserts, handbrake/ gearlever gaiter and elements of the steering wheel (including steering wheel centre if airbag delete option selected).

Suspension: Sports suspension spring/dampers and 'Super Sport' adjustable, yellow Anti-Roll Bar fitted as standard, (standard suspension and Anti-Roll bar supplied as part of 'Comfort Pack' option).

Wheels: Optional lighter Satin Black forged alloy wheels.
ASO Dealer fit options include a lightweight battery to replace standard battery, fitment of 'power pack' consisting of TRD airbox, high flow filter and supercharged sports exhaust. Additional customer optional weight savings include deletion of airbag and pyrotechnic seat belt system.
See Technical Service Bulletin 2013/15 for full details.

Lotus Elise S Cup: November 2014
Re-designated as 220 Cup in January 2015 and Intended as a road version of the track only 2ZR powertrain Elise S Cup R produced by the Lotus Motorsport Division.

Fitted as standard is an exhaust silencer with single outlet pipe and chrome finisher, and T45 Seat Belt Mounting Frame.

To increase downforce the front splitter, fixed hard top roof, barge boards and rear diffuser are carried over from Elise S Cup R, the same *style* rear wing is also fitted but unlike the Cup R it is mounted to the upper clamshell panel instead of the subframe assembly. They are finished in matt black as are the front access panels, rear transom panel and rear window shroud. Door mirror backs are finished in Matt Silver, Elise 220 Cup decals fitted to rear clamshell and radio blanking plate with Union Flag decals applied to the rear wing end plates.

The CHMSL (Centre High Mounted Stop Light) is repositioned to the rear transom panel so it is not obscured by the rear wing assembly.

Standard colour options; Solar Yellow, Aspen White, Chrome Orange, Daytona Blue, Formula Red, Toxic Green.

Interior: Slate grey cloth and SuedeTex® interior scheme and sport seats with white contrast stitching, "Cup" logos to back rest and Lotus roundel to headrest.

Sports suspension, adjustable front anti roll bar, double shear rear track control arms and six spoke 16" front and 17" rear Satin Black Y-type lightweight cast alloy wheels fitted with Yokohama AD07 tyres as standard with Yokohama Advan A048 LTS tyres and Satin Black Motorsport Elise Cup R forged alloy wheels available as an optional extra.

A 'Comfort' Pack option is available which includes CD/MP3/WMA radio with speakers, "220 Cup" logo carpet mats, sound insulation, passenger footrest, auxiliary driving lamps and central door locking.
Other optional extras available are air conditioning, air bag deletion, FIA approved race seats, tow eye kit, harness bar and four point safety harnesses, lightweight battery, FIA approved fire extinguisher system and electrical kill switches and performance induction kit and sports exhaust system.

Lotus Elise 20th Anniversary Special Edition: March 2015
Commemorating 20 years since initially unveiling at the Frankfurt Motorshow, based on the Elise S Club Racer, with the 40,000th Elise model produced on the production line being a 20th Anniversary special edition and supplied with the following as standard:
Interior: Body coloured lighter weight interior centre console, leather or Alcantara lighter sports seat trim option, colour-coded stitching on seats and door cards, colour-coded seat hoops, matt black forged alloy wheels and Elise 20th Anniversary decals on the dashboard stereo plate and seats.
Exterior: Available in Blue, Green, Yellow and Silver with the rear diffuser, door mirrors, roll hoop cover and rear transom in matt black and Elise 20th Anniversary decals above the side repeater.
Equipment: Sport mode switch and auxiliary driving lights.
Additional options: As per standard S Club Racer.

2016 M.Y. Elise Sport and Elise Sport 220
The Elise Sport replaces the Elise and the Elise Sport 220 replaces the Elise S. New body colours and decals.
Revised trim includes the new heritage tartan design in Red or Yellow leather trim in Black, Red and Tan or Black or Red Alcantara trim finishes also available.

Damping mats are fitted to the foot wells as standard, full carpets and sound insulation available if ordered as part of the radio & NVH option.

Updated 2nd January 2018

Elise Cup 250: June 2016
Based on the Elise 220 Cup but in roadster form with an up rated supercharger producing 243 hp (246 PS), new fuel tank and system and a weight reduction of 10 kg compared to the previous models.
Standard specification includes Black or Red Alcantara interior trim with carbon sports seat, ultra lightweight black forged alloy wheels, black soft-top lightweight lithium battery and Gemini 7590 alarm system.

Options are Matt Black hard-top, air con, cruise control, auxiliary driving lights, fire extinguisher and battery isolator, harness cross bar and 4 point harness
Damping mats are fitted to the foot wells as standard, full carpets and sound insulation available if ordered as part of the radio & NVH option package.
Carbon aero pack (including front splitter, rear wing, rear diffuser and side floor-extensions and leather trim pack in Red, Black or Tan.
See Technical Service Bulletin TSB 2016/16 for further information.

Elise 250 50th Special Edition: October 2016
Commemorating 50 years of the Hethel factory
50 cars based on the 250 Cup without side floor-extensions in Classic Metallic Blue, Red, Yellow and White with Roll hoop cover, door mirror caps, rear transom panel, wing uprights and rear diffuser in silver.

Carbon-fibre front splitter, rear wing, tailgate and front access panel are standard, carbon-fibre sports seats finished in dark blue or dark grey leather,

Options are ultralight forged wheels in silver, or black, carbon fibre hardtop, NVH carpet and ICE

Air conditioning, cruise control and Black Pack, including roll hoop cover, door mirror caps, rear transom panel, rear diffuser and wing uprights painted in matt black

Elise 17.5MY: April 2017
First VIN HH_10938
Front and rear clams restyled with larger front air intakes and new rear light configuration to match the Exige 380 The rear diffuser is carried over from the 250 50th edition the shower cape is now standard
The exposed gear shift is carried over from the Exige 350 and introduction of TPMS (Tyre Pressure Monitoring System)
Introduction of the lightweight Sprint variant of the Sport/Sport 220 with ‘sprint’ decals and rear side stripes
Standard (optional for the other models) carbon fibre front access roll hoop and engine covers, light weight forged wheels, carbon seats, polycarbonate rear screen, lithium battery and interior colour pack (painted gear shift bezel, heater control panel and seat inserts)

Options:
Soft top (no cost), GRP or carbon, hardtop, carbon or alcantara sill covers dash inserts, alcantara steering wheel, red calipers, NVH and carpets, ICE, A/C, cruise control, titanium exhaust silencer, sports suspension for 220

Optional packs:
Alcantara and leather and tartan trim pack (seats and door panels) and Black Pack (rear transom, roll hoop cover, mirror plinths and pods, front access panel).
See Technical Service Bulletin TSB 2017/08 for full details

Elise Cup 250: November 2017
Based on the 250 50th edition with the 17.5 Front and rear clams restyled with larger front air intakes and exposed gear shift

Elise Cup 260: November 2017
A limited edition Elise in preparation for Lotus Cars 70th Anniversary, based on the Elise Cup 250 plus the fitment of larger Yokohama Advan AD08R tyres, 1-way adjustable Nitron dampers fitted with stiffer springs, revised front splitter/rear diffuser, the addition of louvers positioned within the front clamshell over the front wheels, a larger rear wing and 2-piece brake discs and sports air filter.

Standard fitment of a carbon fibre replacements of composite panels including the front access panel, rear window shroud, engine cover, sport seats, sill covers and instrument binnacle
See Technical Service Bulletin 2017/27 for full details

Elise CUP 250 GP Edition: Jan 2018
25 cars Ref DRF U09523 In Motorsport Black C152
Front splitter stripe wing uprights seat inserts in Mars Gold C164
Interior colour pack in Motorsport Black C152 & Mars Gold C164
Black Alcantara interior with gold stitching serafil 20 code 130 & isacord code 0552
Elise 220 wheels in Suzuki Gold LF1
Decals in 1080-G241 gloss gold metallic of body stripe laurel wreath ‘LOTUS’ and Cup250
No bargeboards GRP front splitter, GP build plate

Elise 220 EVO Edition: May 2018

To commemorate the award of sports car of the year by EVO magazine Ref CSR 1547/8
Up to 15 cars in two colour schemes, chosen by EVO magazine metallic black or orange
matt black exterior pack with unique EVO decals
Silver embroidered EVO logo on seats with orange or silver contrast stitching
Interior colour pack in metallic black or orange, carbon sill covers
10 spoke black forged wheels

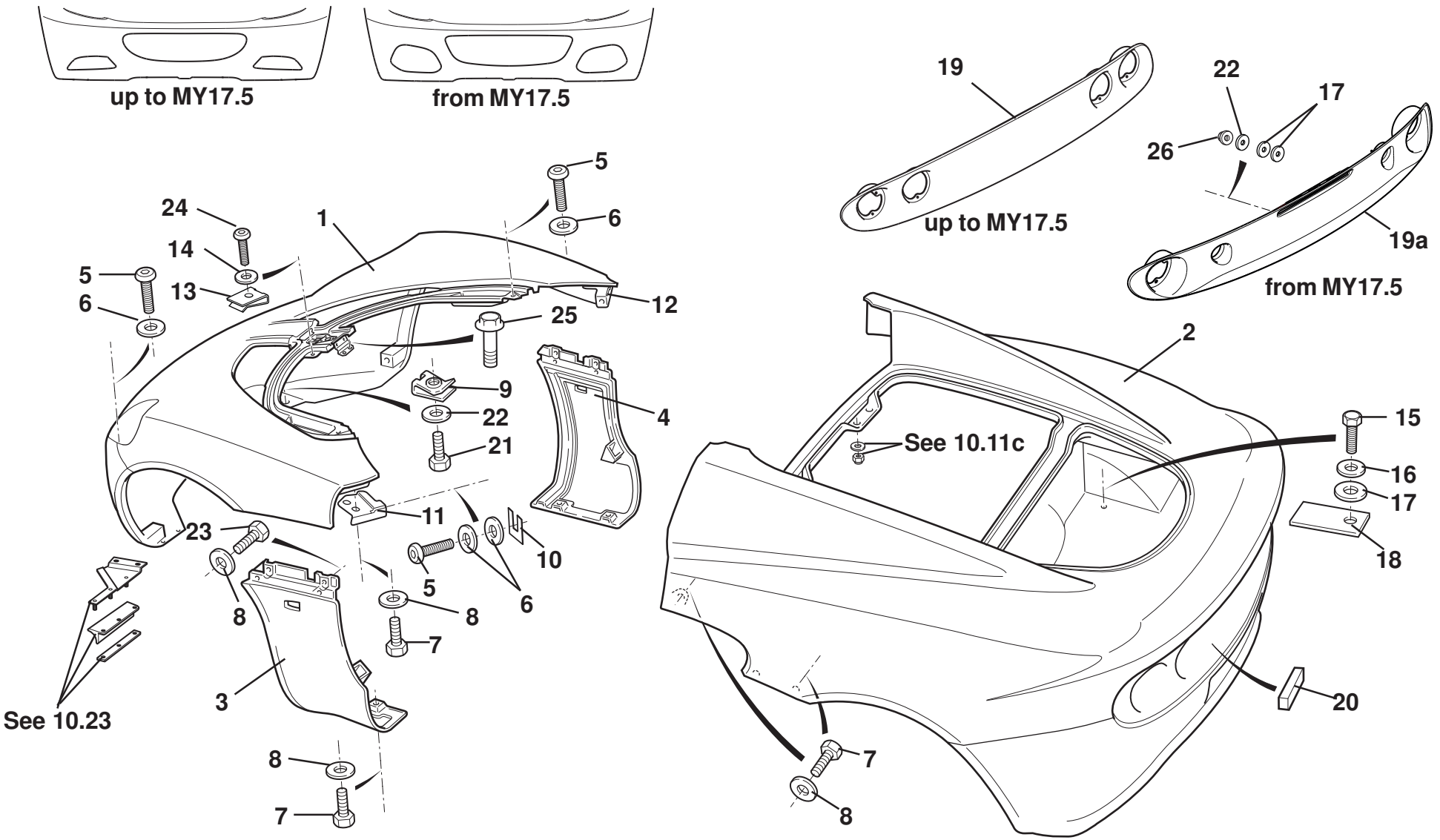

ELISE

10.01e

Updated 3rd April 2017

Function Code 10.01e Body: Front & Rear Clamshells & Fixings, Elise 2011 MY

Dep	Part Description	Remarks	Option	Part Number	Qty
01	Front Clamshell, euro, Primed	From Vin BH_ 11418 No plate plinth mountings change to bonded nut from stud see 12.07a	Up to MY17.5	**A120B0238K**	1
01a	Front Clamshell, euro, Primed		From MY17.5	**A147B0002K**	1
01b	Front Clamshell, federal, Primed		USA/Canada	**A121B0171K**	1
01c	Panel Lamp Support LH	Not illustrated, bonded to clam		**A120B4027F**	1
01d	Panel Lamp Support RH	Not illustrated, bonded to clam		**A120B4028F**	1
02	Rear Clamshell, euro, Primed excludes rear transom	See LSL598 (hole location guide) for cars fiited with rear spoiler	Up to MY17.5	**A120B0317K**	1
02a	Rear Clamshell, euro, Primed excludes rear transom	See LSL598 (hole location guide) for cars fiited with rear spoiler	From MY17.5	**B147B0019K**	1
02b	Rear Clamshell, federal, Primed excludes rear transom	See LSL598 (hole location guide) for cars fiited with rear spoiler	USA/Canada	**A121B0176K**	1
02c	Rear Clamshell, excludes rear transom	Additional fixings for lightweight battery kit	Elise Club Racer '11 MY	**A120B0467K**	1
02d	Rear Clamshell, Korea, Primed excludes rear transom			**C121B0187J**	1
03	Door Hinge Cover Panel, LH, Primed			**A120B4059K**	1
04	Door Hinge Cover Panel, RH, Primed			**A120B4060K**	1
05	Screw, M8 x 25, button hd., S/S, clamshell fixing			**A111W7175F**	6
06	Washer, flat, M8 x 21 x 1.6, clamshell fixing			**A111W4176F**	8
07	Screw, M6 x 16, hex. hd., clamshell fixing			**A075W1028Z**	12

Function Code 10.01e Body: Front & Rear Clamshells & Fixings, Elise 2011 MY

Dep	Part Description	Remarks	Option	Part Number	Qty
08	Washer, flat, M6 x 18 x 1.0, clamshell fixing			**B082W4018F**	16
09	Spirenut, M6, clamshell to undertray			**B100W6372F**	3
10	Shim, front clamshell alignment, 0.5mm			**A116B0460K**	As req.
10a	Shim, front clamshell alignment, 1.0mm			**A116B0461K**	As req.
11	Bracket, front clamshell to 'A' post, LH			**A120B4079F**	1
12	Bracket, front clamshell to 'A' post, RH			**A120B4080F**	1
13	Spirenut, M5 clamshell fixing			**B100W6372F**	4
14	Washer M5			**A075W4035Z**	4
15	Screw, M6 x 35, bootbox to subframe			**A075W1033Z**	4
16	Washer, flat, M6 x 25 x 1.4, S/S, bootbox to subframe			**A082W4131F**	4
17	Washer, neoprene, 25 x 3mm, bootbox to subframe			**A111U6055F**	8
18	Shim, boot floor to subframe, 1.0mm			**A116B0423K**	As req.
18a	Shim, boot floor to subframe, 2.0mm			**A116B0424K**	As req.
19	Transom Panel	Retained by lamp fixings	Up to MY17.5	**A120B0271F**	1
19a	Transom Panel	Retained by lamp fixings	From MY17.5	**A147B0041K**	1
20	Foam Strip. self adhesive	Between clam. & transom, cut to fit		**A054B6110V**	As req.
21	Screw M5 x16 hex hd s/s			**A111W1163F**	5
22	Washer Flat 3/16 x 3/4 x 16g s/s			**B075W4009Z**	7
23	Screw, M6 x 12, hex. hd., clamshell fixing	Front clam. to cover panel		**A075W1027Z**	4
24	Screw M5 x16 btn skt hd s/s, clamshell fixing			**A111W7156F**	4

Function Code 10.01e Body: Front & Rear Clamshells & Fixings, Elise 2011 MY

Dep	Part Description	Remarks	Option	Part Number	Qty
25	Bolt M6 x 16 hex hd flg hd, clamshell centre fixing			**A918W5208F**	2
26	Nut M5, hex flg			**A138W3007F**	2

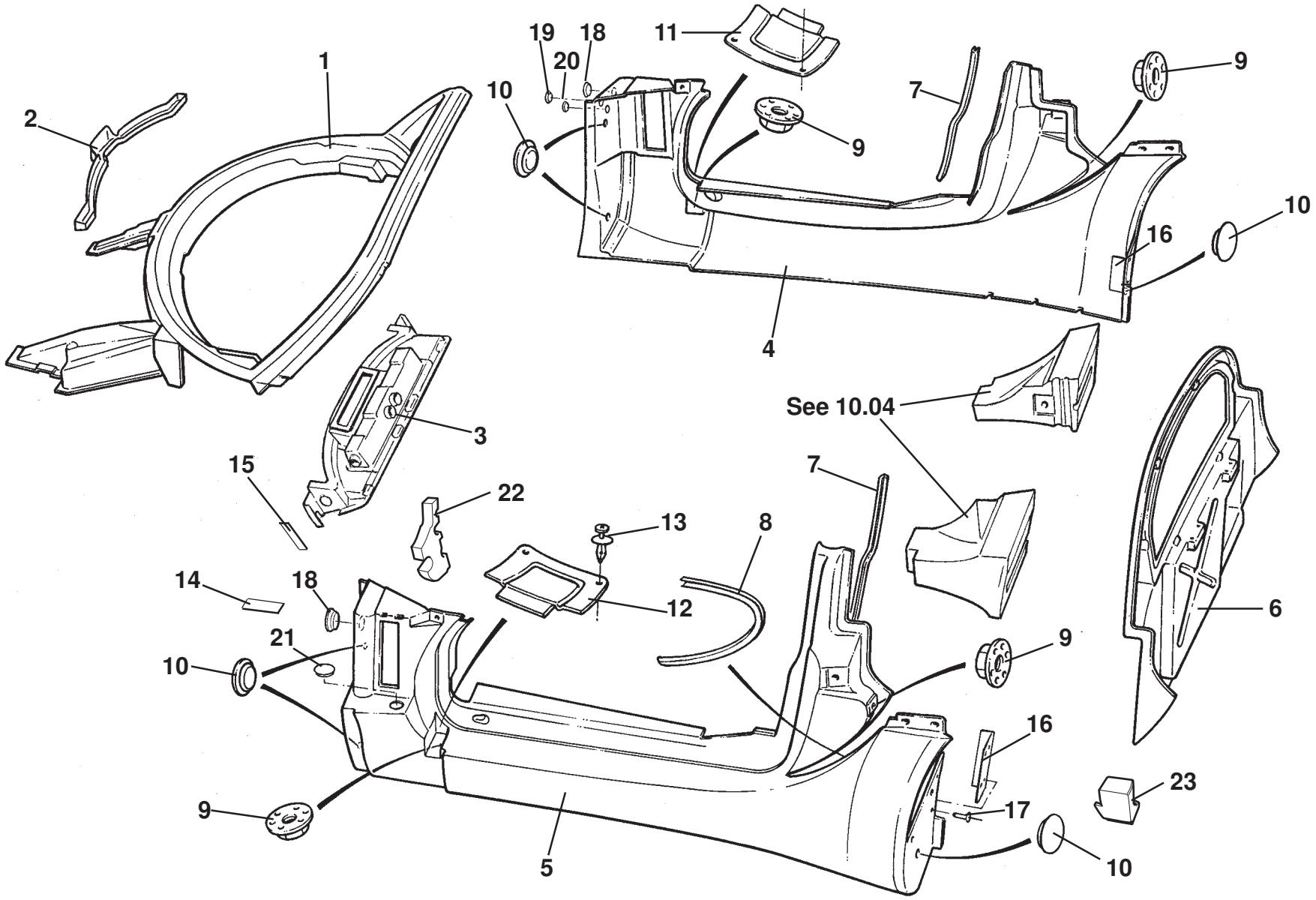

ELISE

10.02a

Function Code 10.02a Body: Sill Panels, Windscreen Frame & Rear Bulkhead

Dep	Part Description	Remarks	Option	Part Number	Qty
01	Windscreen Frame Assembly		Painted	**A116B0148K**	1
02	Gutter, windscreen frame		Elise 2011 MY	**B120B0322F**	1
03	Baffle Panel/FLV Plenum Assembly			**A120B0117F**	1
04	Sill Panel, RH		Elise, except 2ZR	**C120B0050K**	1
04a	Sill Panel, RH		Elise 2ZR	**A120B4132K**	1
05	Sill Panel, LH		Elise, except 2ZR	**C120B0051K**	1
05a	Sill Panel, LH		Elise 2ZR	**A120B4131K**	1
06	Rear Bulkhead		B120B0052F R/B	**C120B0052F**	1
06a	Rear Bulkhead GCC		Gulf States	**A128B0195K**	1
07	Edge Finisher, 'B' post, smooth			**A117U0462F**	2
08	Edge Finisher, side intake, smooth			**A117U0463F**	2
09	Captive Nut, M8, big hd.			**A111W6592F**	18
10	Blanking Grommet, 12.5mm			**A100B6163F**	1
11	Finisher Panel, front sill recess, RH			**B117U0168F**	1
12	Finisher Panel, front sill recess, LH			**B117U0169F**	1
13	Plastic Fastener, panel fix.			**A100W6479F**	4
14	Pad, hole blanking, upper hinge fixings			**A117U0258F**	2
15	Foam Strip, 300mm, baffle panel to screen frame	Cut to fit, see Service Notes, section BO		**A082U6065V**	2
16	Bracket, sill rear to chassis	Bonded to chassis		**A120B0053F**	2
17	Pop Rivet, bracket to sill			**A111W6613F**	4

Function Code 10.02a Body: Sill Panels, Windscreen Frame & Rear Bulkhead

Dep	Part Description	Remarks	Option	Part Number	Qty
18	Blanking Grommet, 38mm, sills front	Unused oil hose holes	Non oil cooler cars	**A116W6730F**	2
19	Blanking Grommet, 30mm, RH sill front	Unused AC pipe hole	Heater cars	**A079U6033F**	1
20	Blanking Grommet, 19mm, RH sill front	Unused AC pipe hole	Heater cars	**A116W6714F**	1
21	Blanking Grommet, 38mm, door aperture front	Unused door harness hole	Non CDL cars	**A116W6730F**	2
22	NVH Foam, sill front		Heater cars	**C120B0074F**	2
23	Foam, 'B' post lower to Seat Belt Anchor Frame, LH			**A117B0701K**	1
23a	Foam, 'B' post lower to Seat Belt Anchor Frame, RH			**A117B0702K**	1

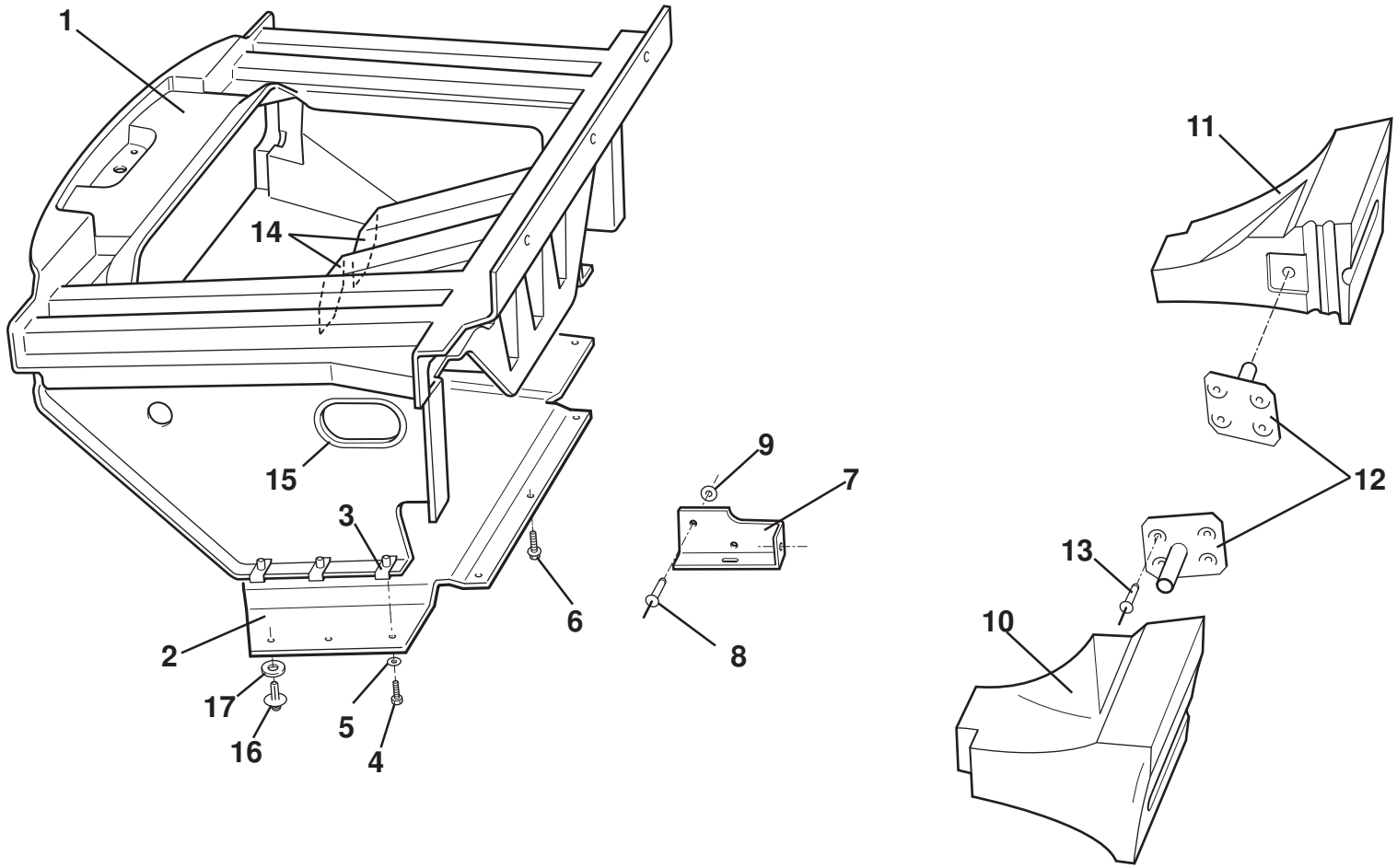

ELISE

10.04

Function Code 10.04 Crash Structures

Dep	Part Description	Remarks	Option	Part Number	Qty
01	Front Crash Structure Assembly, includes nut plates*	04 MY to present		**B120B0190J**	1
02	Panel, front undershield			**B117B0237F**	1
03	Spirenut, M5, undershield fix.	4 off if items 17/18 used		**B100W6372F**	6
04	Screw, M5 x 16, pan, pozi., undershield fix.	4 off if items 17/18 used		**A111W1163F**	6
05	Washer M5 x 18 x 1.5, undershield fix.	4 off if items 17/18 used		**B075W4009Z**	6
06	Screw, M6 x 12, flg. hd., undershield fix.			**A111E6007F**	3
07	Alloy Plate. LH			**A111B0531F**	1
07a	Alloy Plate, RH			**A111B0530F**	1
08	Pop Rivet, plate fix.			**A085W6259F**	6
09	Washer, flat, 3/16" x 1/2", plate to crash structure			**A075W4000Z**	4
10	Side Impact Foam, LH			**A120B0063F**	1
11	Side Impact Foam, RH			**A120B0062F**	1
12	Bracket, foams to chassis			**A117B0556F**	2
13	Pop Rivet, brackets to chassis			**A117W6734F**	8
14	Grille, leaf screen	Bonded to crash structure		**A117B0466F**	2
15	Edging Strip, hose protection			**A111U6034V**	0.3m
16	Plastic Fastener, undertray fixing	Fits through body	If fitted	**A100W6481F**	2
17	Washer, flat, M8 x 20 x 2.5, undertray fixing		If fitted	**A079W4019F**	2
18	Blanking Plate, crash structure	Not illustrated, Used to blank HVAC holes	Gulf States	**A120B0241K**	2
19	Betaseal 1701, crash structure to chassis	Not illustrated		**A082B6281F**	300mm

Function Code 10.04 Crash Structures

Dep	Part Description	Remarks	Option	Part Number	Qty
		*A level crash structure no longer availiable for cars fitted nuts welded onto towing eye bracket see 2b 10.31			

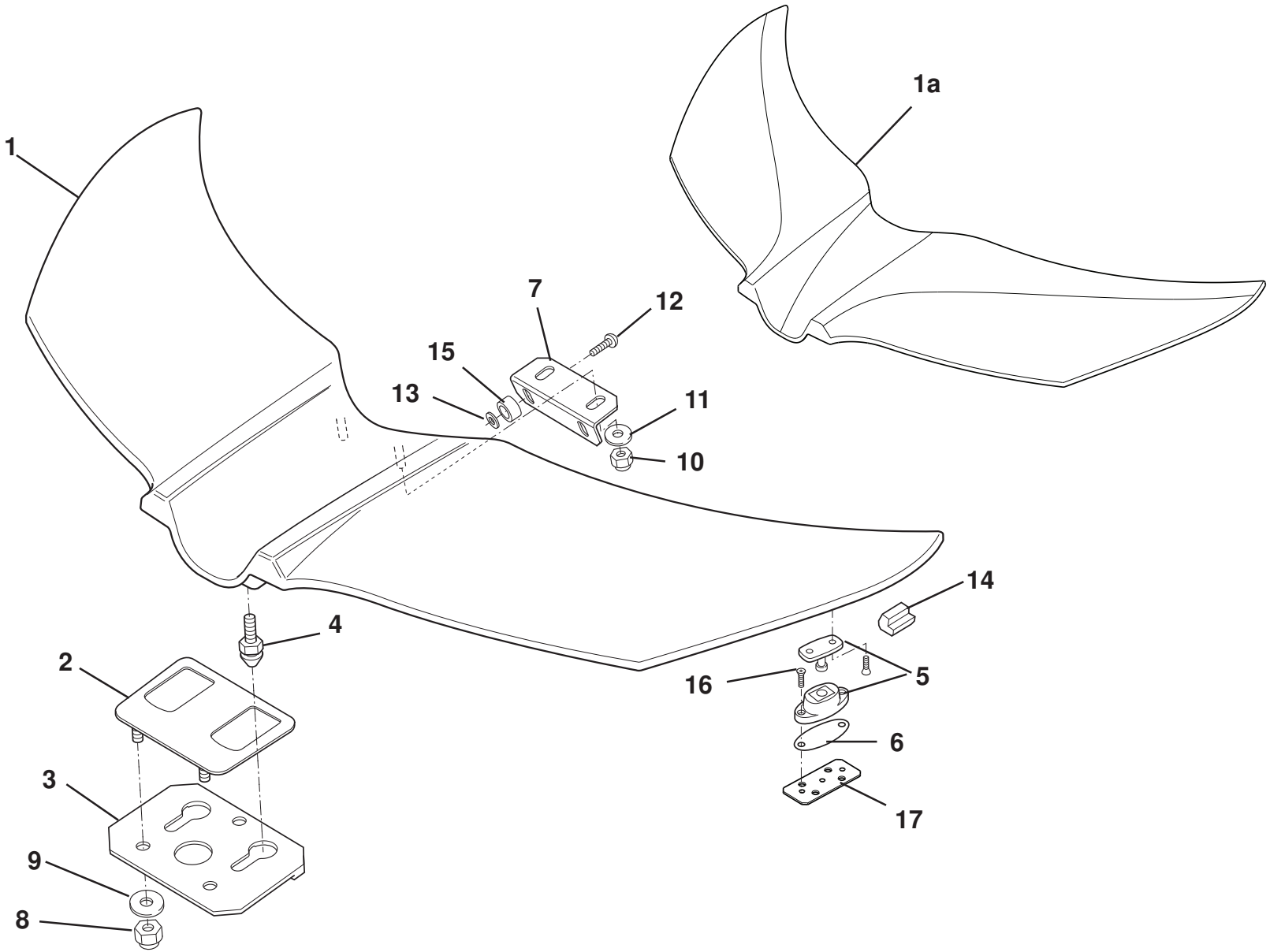

ELISE

10.09b

Updated 5th June 2017

Function Code 10.09b Front Services Access Panel, Elise 2011 MY

Dep	Part Description	Remarks	Option	Part Number	Qty
01	Access Panel, front		Primed	**A120B0321J**	1
01a	Access Panel, front, carbon			**A120B0599F**	1
02	Stud Plate, access cover			**A120B0345F**	1
03	Plate, access cover mounting			**B120B0297F**	1
04	Pin, panel locating			**A120B0342F**	2
05	Mounting Block Assembly			**A120B0325F**	2
06	Shim, 1.5mm, mounting block to clamshell			**A120B0323F**	As req.
07	Bracket, access cover rear			**A120B0308F**	1
08	Nyloc Nut, M6, plate fixing			**A075W3009Z**	2
09	Washer, flat, M6 x 15 x 1.5 s/s blk , plate fixing			**A082W4133F**	2
10	Nyloc Nut, M5, bracket to panel			**A075W3008Z**	2
11	Washer, flat, M5 x 19 x 1.4 s/s blk, bracket to panel			**B082W4107F**	2
12	Screw, M6 x 30, s/s btn hd blk, cover to clamshell			**A132W5026F**	2
13	Retaining Washer, screw			**A120B0310F**	2
14	Buffer Rubber, access panel front clam			**A120B0347F**	2
15	Collar M6			**A120B0309F**	2
16	Screw M4 x 20 pozi csk			**A100W5156F**	8
17	Nut Plate			**B120B0324F**	2

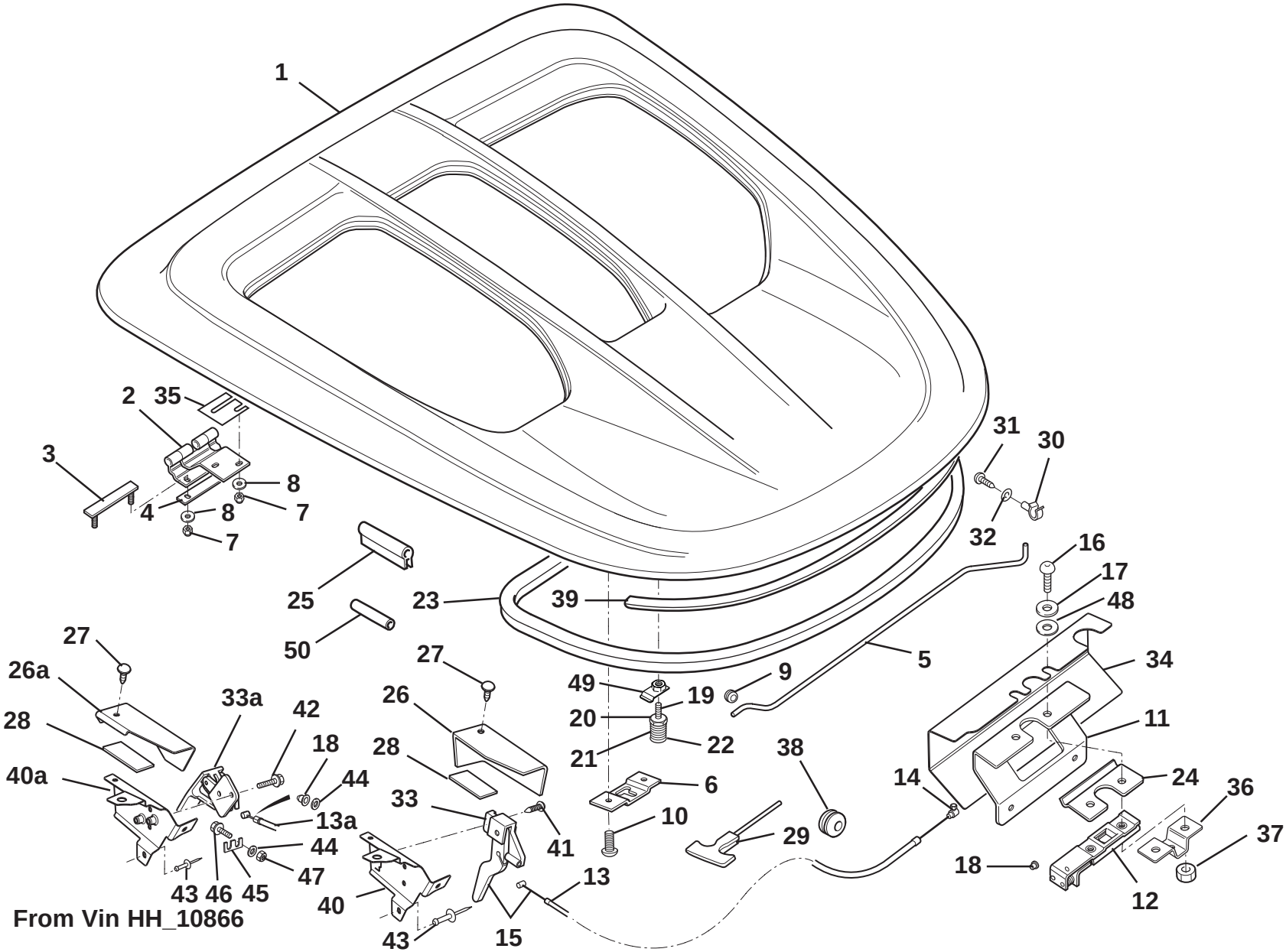

From Vin HH_10866

ELISE

10.11c

Updated 30th July 2018

Function Code 10.11c Engine Cover Lid & Release Mechanism, Elise 2011 MY

Dep	Part Description	Remarks	Option	Part Number	Qty
01	Engine Cover Lid		Primed	**A120B0288K**	1
02	Hinge Assembly			**A120B0287F**	2
03	Stud Plate, hinge retention			**B117B0236F**	2
04	Shim, ABS, 1.6mm, hinge to clamshell/bulkhead			**A117B0386K**	As req.
05	Stay, engine cover lid			**A120B0373F**	1
06	Retainer, stay			**B128U0034F**	1
07	Nyloc Nut, M6, hinge to lid & clam.			**A907E6285F**	8
08	Washer, flat, M6 x 25, hinge to lid & clam.			**B075W4017Z**	8
09	Grommet, stay to bulkhead			**X036B6010Z**	1
10	Screw M6 x 16mm but cap			**A082W7105F**	2
11	Bracket, latch			**C120B0273F**	1
12	Latch Assembly, engine cover			**A082U6087F**	1
13	Cable, engine cover release	LHS 1600mm	Up to approx Vin HH_10866	**A120B0294F**	1
13a	Cable, engine cover release	RHS 2400mm	Up to approx Vin HH_10866	**A122B0253S**	1
13b	Cable, engine cover release LHD/RHD,LHS	Also order items 18 & 44, cannot be used to replace item 13, refer to TSB 2017/11	From approx Vin HH_10866	**A138B0088F**	1
14	Solderless Nipple, release cable			**A116W6762F**	1
15	Lever Assembly, engine cover release, LHS		Up to approx Vin HH_10866	**A122B0251S**	1

Function Code 10.11c Engine Cover Lid & Release Mechanism, Elise 2011 MY

Dep	Part Description	Remarks	Option	Part Number	Qty
15a	Lever & Cable Assembly, engine cover release, LHS	LHS 1600mm	Up to approx Vin HH_10866	**A116B0215F**	1
15b	Lever Assembly, engine cover release, RHS		Up to approx Vin HH_10866	**A122B0252S**	1
16	Screw, M8 x 25, skt. button hd. S/S, latch to bracket			**A111W7175F**	2
16a	Screw, M8 x 30, hex hd, latch to bracket	For cars fitted with item 36		**A075W1040Z**	2
17	Washer, flat, M8 x 20 x 2.5 S/S, latch to bracket			**A079W4019F**	4
18	Bush, cable			**A111U6049F**	2
19	Striker Pin			**A116B0468F**	1
20	Nut, striker pin			**A120B0379F**	1
21	Spring, striker pin			**A111U6023F**	1
22	Spring Retainer Cup			**A111U6022F**	1
23	Weatherseal, boot	Also order item 50		**A147U0033V**	2.2M
24	Striker Guide Plate, tailgate			**B120B0282F**	1
25	Weatherseal,engine bay gutters	2x 150mm & 2 x 75mm - engine bay		**A117U6001V**	1
26	Cover, release handle bracket, LHS		Up to approx Vin HH_10866	**B122U0015K**	1
26a	Cover, release handle bracket, LHS	Cannot be used to replace item 26, refer to TSB 2017/11	From approx Vin HH_10866	**C122U0015K**	1
26b	Cover, release handle bracket, RHS		Up to approx Vin HH_10866	**B122U0016K**	1
27	Fir tree			**A116U0201F**	1
28	Double Sided Tape			**B075U6070V**	1
29	'T' Handle/Cable Assembly, emergency release		USA/Canada	**A123U0004F**	1

Function Code 10.11c Engine Cover Lid & Release Mechanism, Elise 2011 MY

Dep	Part Description	Remarks	Option	Part Number	Qty
30	Retaining Clip, stay			**A082W6325F**	1
31	Screw, No. 8 x 0.5", pan hd. Pozi., clip fixing			**A075W5034Z**	1
32	Washer, flat, 3/16" x 0.5", black, clip fixing			**A082W4133F**	1
33	Lever Assembly, engine cover release, LH		Up to approx Vin HH_10866	**A120B6060F**	1
33a	Lever Assembly, engine cover release, RH		Up to approx Vin HH_10866	**A120B6061F**	1
33b	Lever Assembly Kit, engine cover release, LHD,RHD	Cannot be used to replace item 33, refer to TSB 2017/11	From approx Vin HH_10866	**A120B0679S**	1
34	Heatshield. latch assembly			**A120S0049F**	1
35	Shim, hinge			**A120B0395F**	As req.
36	Latch Protection Plate			**A138B0306F**	1
37	Nut M8, latch mounting			**A075W3021Z**	2
37a	Nut M8 dome, latch mounting	For cars fitted with item 36		**A120W3189F**	2
38	Grommet		Up to approx Vin HH_10866	**A138W6004F**	2
39	Weatherseal, engine cover			**A117U6007V**	0.85M
40	Bracket, release handle to chassis, LHS			**A120B4135F**	1
40a	Bracket, release handle to chassis, LHD/RHD, LHS	Cannot be used to replace item 40, refer to TSB 2017/11		**B120B4135F**	1
40b	Bracket, release handle to chassis, RHS			**A120B4136F**	1
41	Screw No.8 x 3/4 flg pozi			**A075W5074Z**	1
42	Screw M8 x 20, hex flg hd			**A132W5003F**	2
43	Rivet			**A085W6259F**	2

Function Code 10.11c Engine Cover Lid & Release Mechanism, Elise 2011 MY

Dep	Part Description	Remarks	Option	Part Number	Qty
44	Washer M5 x 10 x 0.8			**A075W4011Z**	1
45	Plate, tailgate release lever			**A138B0715F**	1
46	Screw M5 x 10, hex flg hd			**A132W5001F**	1
47	Nut M5			**A100W3113F**	1
48	Washer, flat, M8 x 20 x 1.5 S/S, latch to bracket			**A111W4176F**	2
49	Nutplate M10, floating striker pin fixing			**B111U0032F**	1
50	Tube	2 x 85mm & 1 x 50mm		**A116M0040V**	1

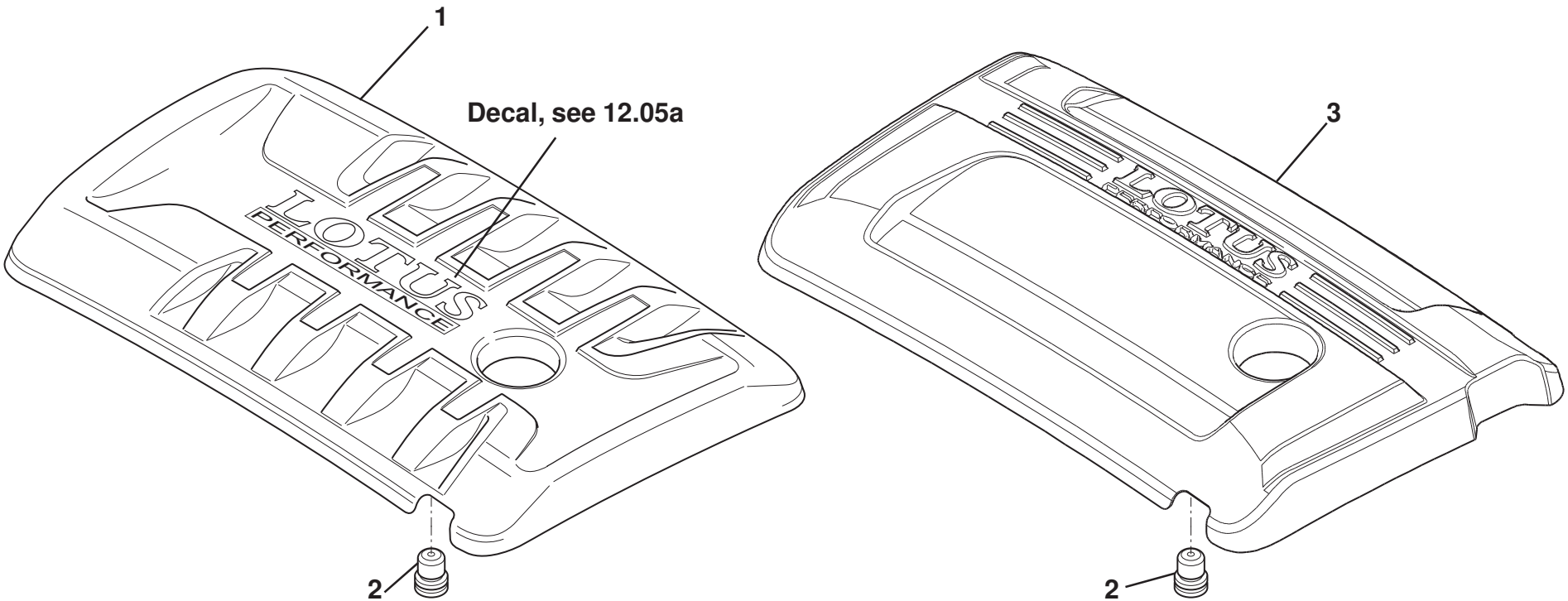

ELISE

10.13a

Function Code 10.13a Engine Compartment Cover, Elise 2011 MY, 1ZR, 2ZR

Dep	Part Description	Remarks	Option	Part Number	Qty
01	Engine Cover Panel		1ZR	**A120B0256F**	1
02	Isolator, cover mounting	For fixings see, 40.07e , 42.07e & 4209b	1ZR, 2ZR	**B120B0291F**	4
03	Engine Cover Panel	For fixings see, 40.07e , 42.07e & 4209b	2ZR	**A120E0167F**	1

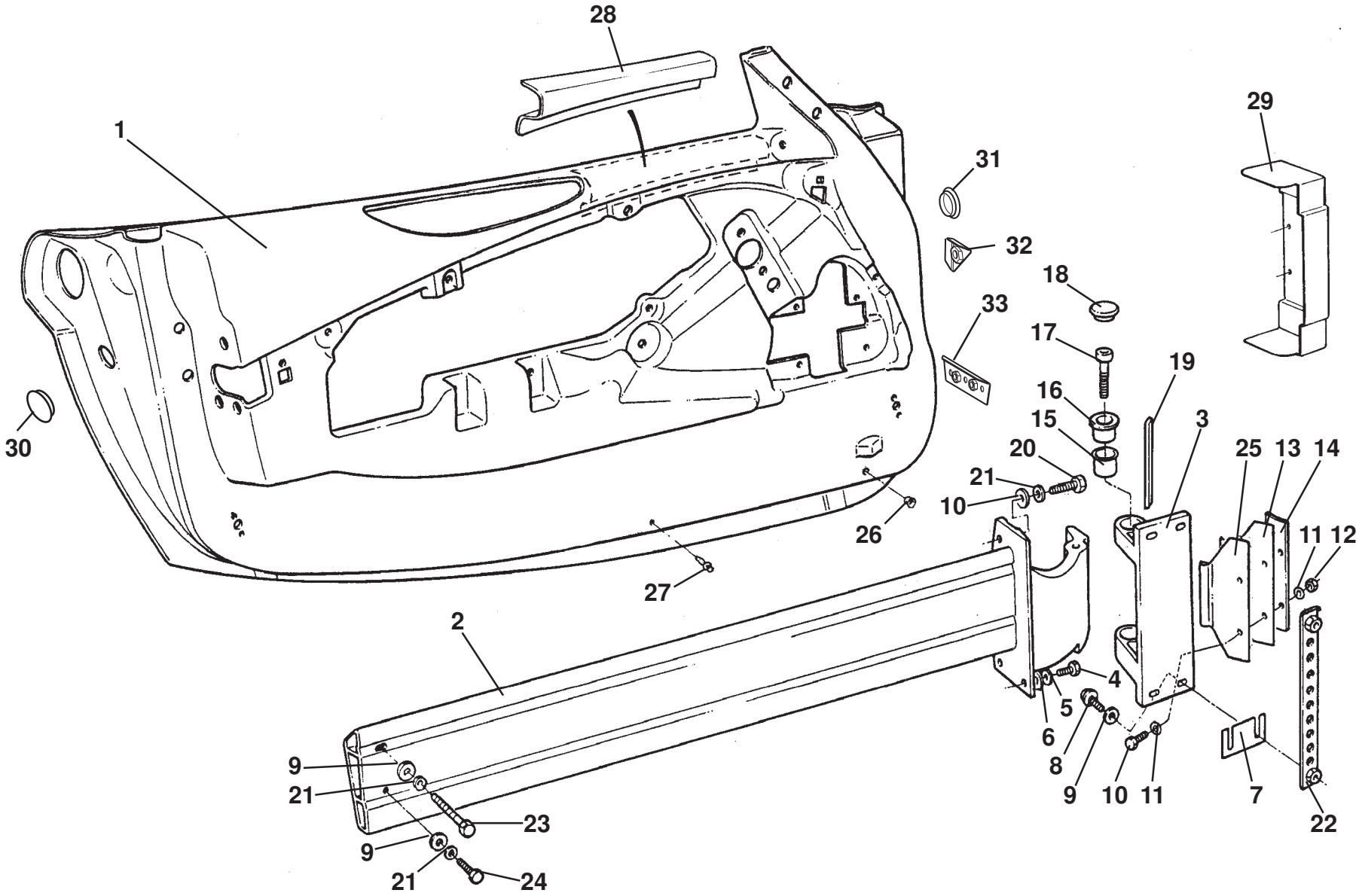
28
1
29
31
32
18
33
17
19
16
15
3
20
25
13
14
21
10
11
12
30
26
27
2
4
5
6
8
9
10
11
7
22
9
21
23
9
21
24

ELISE

10.15

Function Code 10.15 Door Shells, Beams, Hinges

Dep	Part Description	Remarks	Option	Part Number	Qty
01	Door Shell, LH			**E117B0061K**	1
01a	Door Shell, RH			**E117B0060K**	1
02	Door Beam, LH			**A116U0029F**	1
02a	Door Beam, RH			**A116U0030F**	1
03	Hinge, chassis to door beam			**A111U0055F**	2
04	Setscrew, M6 x 20, hex. hd., beam to door fix.			**A075W1030Z**	4
05	Washer, shakeproof, M6			**A075W4046Z**	4
06	Washer, flat, M6 x 1.5			**A075W4015Z**	4
07	Shim, door hinge, 1.0mm			**A111B0316F**	As req
07a	Shim, door hinge, 1.25mm			**A116B0388F**	As req.
07b	Shim, door hinge, 1.5mm			**A111B0317F**	As req
07c	Shim, door hinge, 2.0mm			**B111B0314F**	As req.
08	Screw, M8 x 30, hex flg hd.			**A116W5245F**	8
09	Washer, flat, M8 x 16.6 x 1.4			**A075W4020Z**	18
10	Screw, M6 x M20, hex. hd.			**A075W1030Z**	4
11	Washer, flat, M6			**A075W4013Z**	8
12	Nut, M6, Nyloc			**A075W3009Z**	4
13	Spring Plate, door check	Fit follower, item 25 to plate		**C111B0174F**	2
14	Support Plate, door check spring			**C111B0175F**	2
15	Bearing, door hinge			**A111U6025F**	4
16	Bush, door hinge			**A111U0057F**	4

Function Code 10.15 Door Shells, Beams, Hinges

Dep	Part Description	Remarks	Option	Part Number	Qty
17	Screw, M10 x 30, cap hd.			**A075W7030F**	4
18	Dust Cap, door hinge			**A111U6024F**	2
19	Door Stop Buffer Strip	Cut to fit, 135mm, 2 off		**B111B0177V**	As req.
20	Setscrew, M8 x 20, hex. hd., beam to door fix.			**A075W1038Z**	4
21	Washer, shakeproof, M8			**A075W4048Z**	10
22	Nutplate, door hinges	Fitted in chassis		**A111U0056F**	4
23	Bolt, M8 x 45, hex,hd.,beam to rear bracket, upper			**A075W2040Z**	2
24	Setscrew, M8 x 25, hex hd thin, beam to rear bracket, lower			**A075W1081Z**	2
25	Follower, door check spring	Fit to item 13		**A116B0418F**	2
26	Finisher Ring, door drainholes			**A075P6064F**	2
27	Bump Stop Scrivet			**A116U0137F**	2
28	Door Reinforcement, inner, LH	Bonded inside doorshell		**A117B0663F**	1
28a	Door Reinforcement, inner, RH	Bonded inside doorshell		**A117B0664F**	1
29	Cover, door hinge			**A116B6006F**	2
30	Blanking Grommet, door rear			**A082B6057F**	2
31	Blanking Grommet, 40mm, door front	Unused door harness hole	Non CDL cars	**A116W6730F**	2
32	Nutplate, door to beam, upper	Bonded inside doorshell		**B111B0082F**	2
33	Nutplate, door to beam, lower	Bonded inside doorshell		**A111B0081F**	2
34	Door Curtain, weather sealing	Not illustrated		**A117U0152F**	2

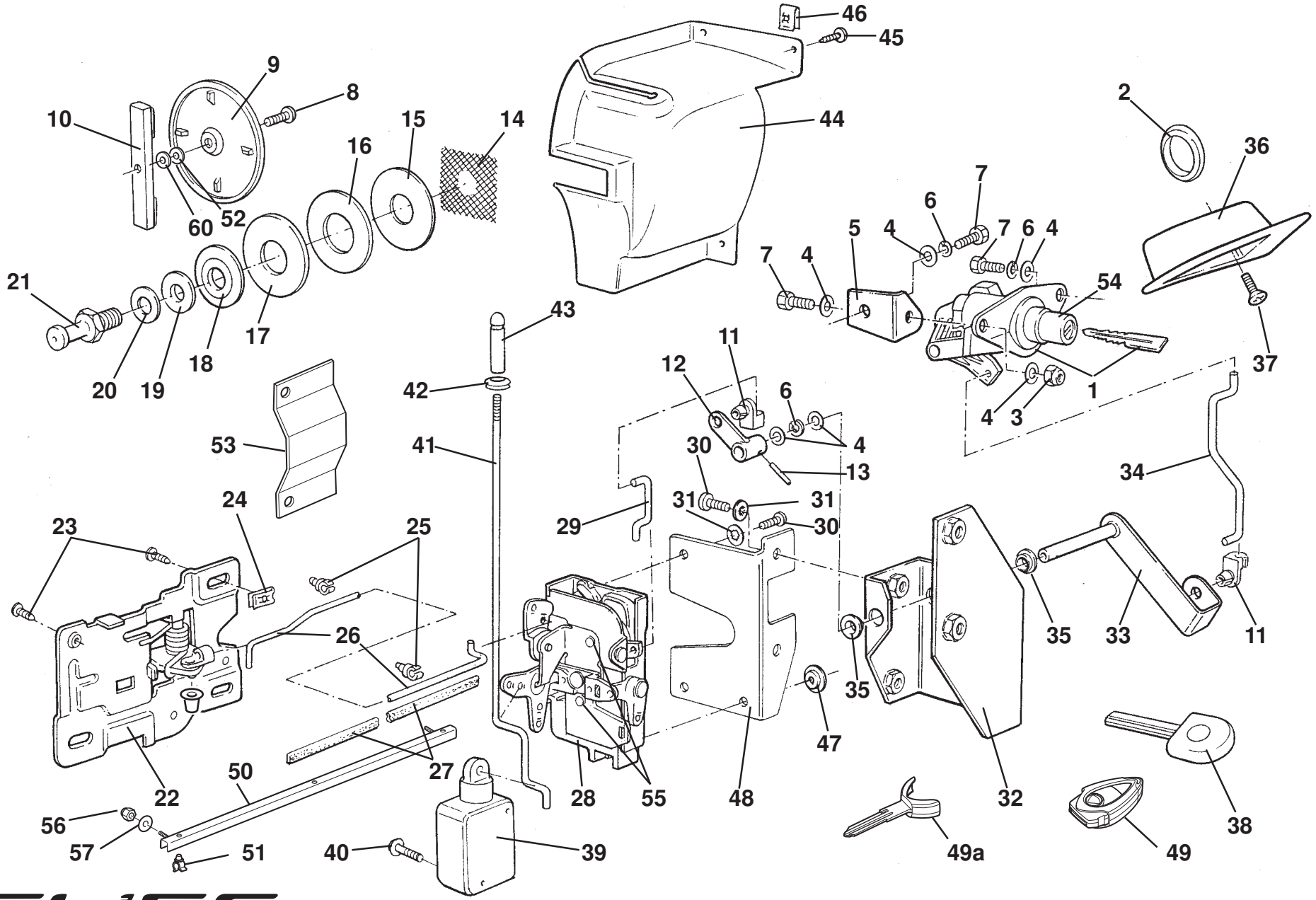
46
45
9
8
10
15
14
16
44
2
36
60
52
7
6
5
4
7
6
4
7
4
54
21
43
17
18
20
19
11
12
6
37
1
4
3
42
53
41
30
4
13
34
24
31
31
29
30
23
25
35
33
11
26
35
47
22
27
50
28
55
48
32
38
56
57
51
40
39
49a
49

ELISE

10.17

Function Code 10.17 Door Latch Mechanism

Dep	Part Description	Remarks	Option	Part Number	Qty
01	Vehicle Lock Set, door, boot, steering, fuel & 2 key blades	(L-code) Order fuel cap (section 44.01 & transmitter fob (see section 17.33b/c). Send Notification alarm/lock replacement form to ASO		**A120H0006F**	1
02	Blanking Grommet, linkage access hole			**A082B6057F**	2
03	Nyloc Nut, M6, support bracket fix.			**A075W3009Z**	2
04	Washer, flat, M6 x 12.1 x 1.4, support brkt fix			**A075W4013Z**	12
05	Support Bracket, release button, LH			**A117U0001F**	1
05a	Support Bracket, release button, RH			**A117U0002F**	1
06	Washer, wavy, 0.25", support brkt. fix.			**A075W4087F**	6
07	Setscrew, M6 x 16, support brkt. fix.			**A075W1028Z**	6
08	Screw, M5 x 16, pozi, cover plate fix			**A082W5184F**	2
09	Reflector/Cover			**A117M6026F**	2
10	Fixing Strap, cover plate			**A111U0095F**	2
11	Nylon Clip, linkage retention			**A082U6267F**	6
11a	Bush, nylon	Not illus., fits clip 11 into handle 22/22a see SB 2008/15		**A120U6012F**	2
12	Lever, door latch release			**B111U0122F**	2
13	Roll Pin, door latch lever to spindle retention			**A111U6560F**	2

Function Code 10.17 Door Latch Mechanism

Dep	Part Description	Remarks	Option	Part Number	Qty
14	Shim, expanded stainless, door striker attachment			**A111U0215F**	2
15	Shim, 2mm, door striker pin			**A111U0220F**	2
16	Shim, 4mm, door striker pin			**A111U0219F**	2
17	Front Collar, door striker pin			**A111U0138F**	2
18	Finisher, door striker pin			**A111U0137K**	2
19	Washer, striker			**A111U0136F**	2
20	Washer, flat, M12 x 24 x 1.6, door striker pin			**A075W4071F**	2
21	Striker Pin, door latch			**A111U6003F**	2
22	Release, door latch, interior, LH	Includes handle		**A111U6005F**	1
22a	Release, door latch, interior, RH	Includes handle		**A111U6004F**	1
23	Screw, No. 8 x 3/4", pozi., door release fix.			**A075W5074Z**	8
24	Spire Nut, No.8, captive, door release fix.			**A075W6016Z**	6
25	Plastic Clip, interior release rod guide			**A075J6027Z**	4
26	Rod, interior release to latch, LH	See SB 2008/15		**B117U0137F**	1
26a	Rod, interior release to latch, RH	See SB 2008/15		**B117U0138F**	1
27	Foam Strip, 19 x 3mm			**A082U6067F**	As req.
28	Latch mechanism, LH			**A111U0389S**	1
28a	Latch mechanism, RH			**A111U0388S**	1
29	Rod, latch to lever assy.			**A111U0134F**	2
30	Screw, M6 x 12, pozi., door latch/ bracket fix.			**A111W5214F**	10
31	Washer, shakeproof, M6, door latch fix.			**A075W4046Z**	6

Function Code 10.17 Door Latch Mechanism

Dep	Part Description	Remarks	Option	Part Number	Qty
32	Bracket, door beam attachment, LH			**B116B0179F**	1
32a	Bracket, door beam attachment, RH			**B116B0180F**	1
33	Spindle/Lever, door latch release, LH			**A116U0035F**	1
33a	Spindle/Lever, door latch release, RH			**A116U0036F**	1
34	Rod, latch to release button			**A117U0003F**	2
35	Bush, lever/spindle assy.			**A111U6018F**	4
36	Door Pull, exterior, LH			**C117B0135F**	1
36a	Door Pull, exterior, RH			**C117B0136F**	1
37	Screw, M4 x 16, csk, cap hd., exterior door pull fix.	Black dacromet finish		**A117W7208F**	4
38	Blank Key, without light	(L-code) For item 1		**A120H6002S**	2
39	Actuator, central door locking	If unavailable fit items 39a, 39b, 41a and refer to TSB 2015/08	Up to Vin FH_11653	**B116M6039F**	2
39a	Actuator, central door locking		From vin Vin FH_11653	**A138M0087F**	2
39b	Actuator Fly Lead		From vin Vin FH_11653	**A138M0097F**	2
40	Screw, No.8 x 3/4" flg. hd. pozi. CDL Actuator to door	Black finish		**A075W5074Z**	4
41	Rod, CDL to sill button			**A117U0329F**	2
41a	Rod, CDL to sill button LH		From vin Vin FH_11653	**A138U4019F**	1
41b	Rod, CDL to sill button RH		From vin Vin FH_11653	**A138U4020F**	1
42	Grommet, button through sill			**X036L6004Z**	2
43	Button, door locking			**A117U0330F**	2
43a	Button, door locking		Elise Club Racer '12 MY	**A132U0455F**	2

Function Code 10.17 Door Latch Mechanism

Dep	Part Description	Remarks	Option	Part Number	Qty
44	Cover, door latch, LH	Latch security		**A117U0425F**	1
44a	Cover, door latch, RH	Latch security		**A117U0426F**	1
45	Screw, No. 8 x 0.75", flg. hd. pozi., cover to door			**A075W5074Z**	6
46	Spirenut, No. 8, cover to door			**A075W6016Z**	6
47	Washer, top hat, latch to door	Bonded to door, outer fixings only		**A117W4192K**	2
48	Bracket, latch mounting, LH	Bonded to inner door		**A116B0247F**	1
48a	Bracket, latch mounting, RH	Bonded to inner door		**A116B0248F**	1
49	Transmitter Fob	PFK alarm, see 17.33b for Gemini see 17.33c, excludes blade		**A120M0049F**	2
49a	Key Blade, uncut	PFK alarm, see 17.33b,for Gemini see 17.33c excludes transmitter fob		**A120H0008S**	2
49b	Key Blade, cut	PFK alarm, see 17.33b,for Gemini see 17.33c excludes transmitter fob		**A120H0009S**	2
50	Cover, door release rod, LH			**A117U0321F**	1
50a	Cover, door release rod, RH			**A117U0320F**	1
51	Clip, release rod to cover			**A082W6457F**	6
52	Washer, ABS, reflector to door			**A116B0978K**	2
53	Bracket, door pull cover			**B117U0324F**	2
54	Sleeve, door release button			**A117H6005S**	2
55	Rivet, door release lever pivot			**A117H6006S**	4

Function Code 10.17 Door Latch Mechanism

Dep	Part Description	Remarks	Option	Part Number	Qty
56	Nut M5			**A100W3113F**	4
57	Washer Flat M5			**A075W4011Z**	4
58	Lock Lubricant	Not illustrated		**A117U6019S**	25ml
59	Bush Top Hat			**A082U6267F**	2
60	Washer M5 Neoprene, reflector to door			**A082W4115F**	2
		NOTE: For full information on all Lotus Security Sytems, see LSL483g			

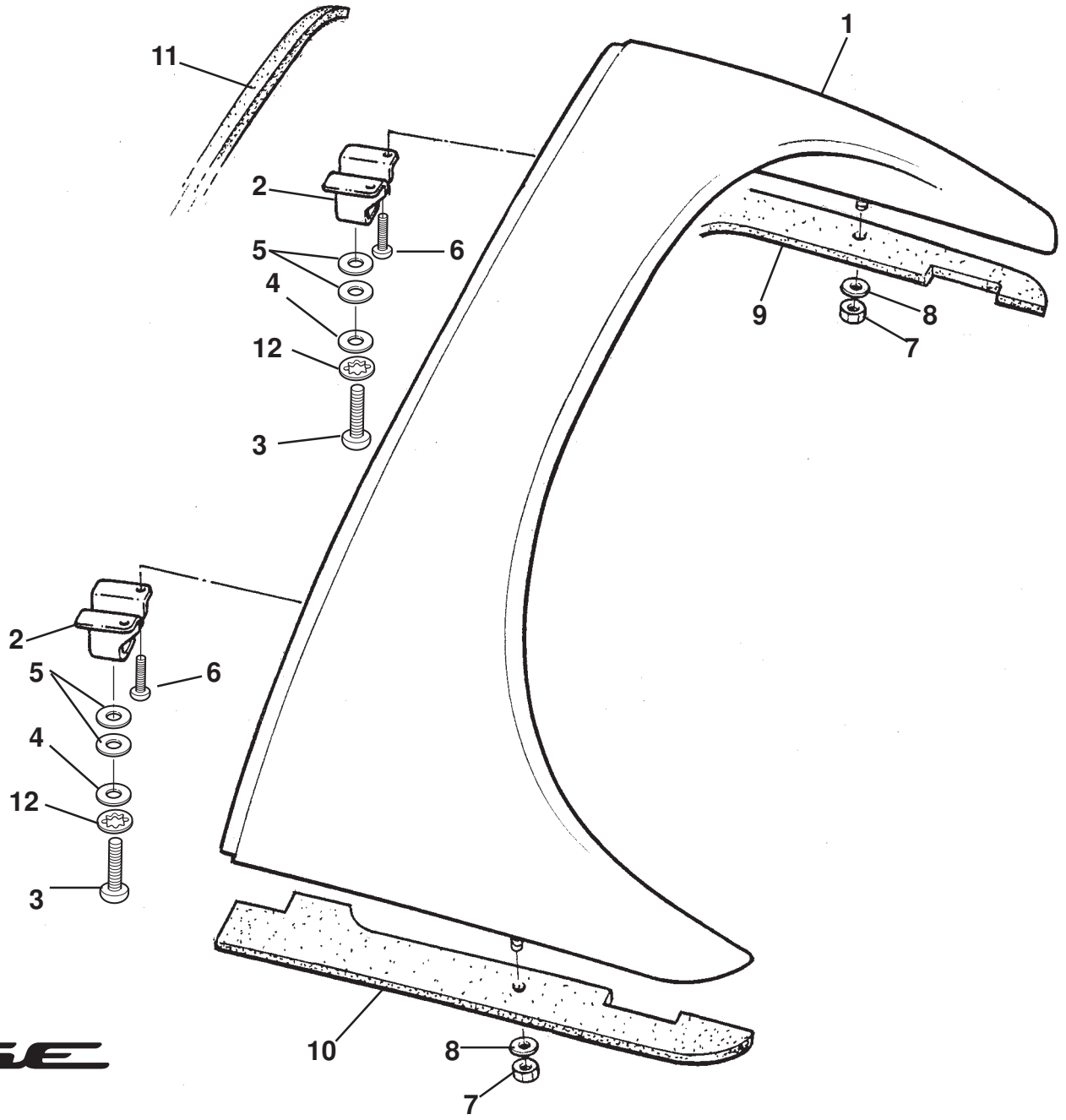

ELISE

10.20

Updated 30th July 2018

Function Code 10.20 Rear Window Shroud & Fixings

Dep	Part Description	Remarks	Option	Part Number	Qty
01	Rear Window Shroud Assembly		Primed	**B117B0445K**	1
01a	Rear Window Shroud Assembly, carbon			**A147B0050F**	1
02	Bracket, shroud to bulkhead			**B117B0091F**	2
03	Screw, M6 x 25, cap hd., bracket to bulkhead			**A111W7170F**	2
03a	Screw, M6 x 25, hex hd., bracket to bulkhead			**A075W1031F**	2
04	Washer, flat, M6 x 18 x 1, bracket to bulkhead			**B082W4018F**	2
05	Spacer Washer, neoprene, shroud to bulkhead			**A111U6055F**	4
06	Screw, M5 x 10, flg., button hd., bracket to shroud			**A117B0310H**	4
07	Nut, M5, rear shroud to clamshell			**A075W3008Z**	2
08	Washer, flat, M6 x 18 x 1, rear shroud to clamshell			**B082W4018F**	2
09	Foam Gasket, RH, shroud to clamshell			**A117B0484F**	1
10	Foam Gasket, LH, shroud to clamshell			**A117B0485F**	1
11	Foam Strip, self adhesive, shroud to bulkhead			**A082U6065F**	1.2M
12	Washer, shakeproof, M6			**A075W4046Z**	2

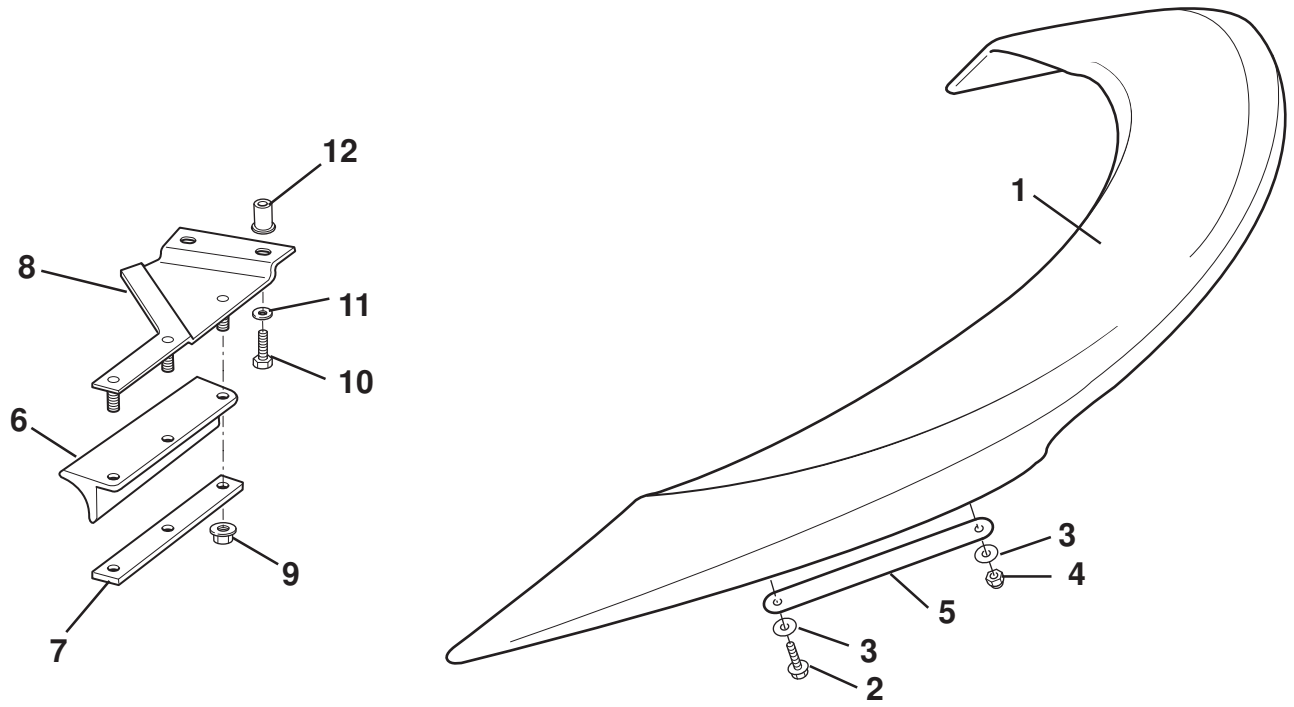
12
8
11
10
6
9
7
1
3
4
5
3
2

Function Code 10.23 Bumpers, Valences Spoilers & Aerofoils

Dep	Part Description	Remarks	Option	Part Number	Qty
01	Spoiler, rear	Blow moulded plastic, See LSL596		**A121B0144F**	1
02	Screw, M6 x 14, hex. flg. hd., spoiler to clam.			**A116W5233F**	2
03	Washer, flat, M6 x 25 x 1.4, spoiler to clam.			**B075W4017Z**	4
04	Nyloc Nut,, M6, thin, spoiler to clam.			**A907E6285F**	2
05	Gasket, rear spoiler to clamshell			**A121B0150F**	2
06	Extrusion, aero flap	Front clam		**A120B0367F**	2
07	Bracket, aero flap	Front clam		**A120B0368F**	2
08	Bracket, aero flap mounting LH	Front clam	Up to 17.5 MY	**B120B4113F**	1
08b	Bracket, aero flap mounting RH	Front clam	Up to 17.5 MY	**B120B4114F**	1
08c	Bracket, aero flap mounting LH	Front clam	17.5 MY	**A147B4011F**	1
08d	Bracket, aero flap mounting RH	Front clam	17.5 MY	**A147B4012F**	1
09	Nut M6 flg hd			**A121W3196F**	6
10	Screw M5 x 16 hex hd			**A111W1163F**	4
11	Washer, flat, 3/16 x 3/4 x 16g			**B075W4009F**	4
12	Rivnut M5			**A111W6539F**	4

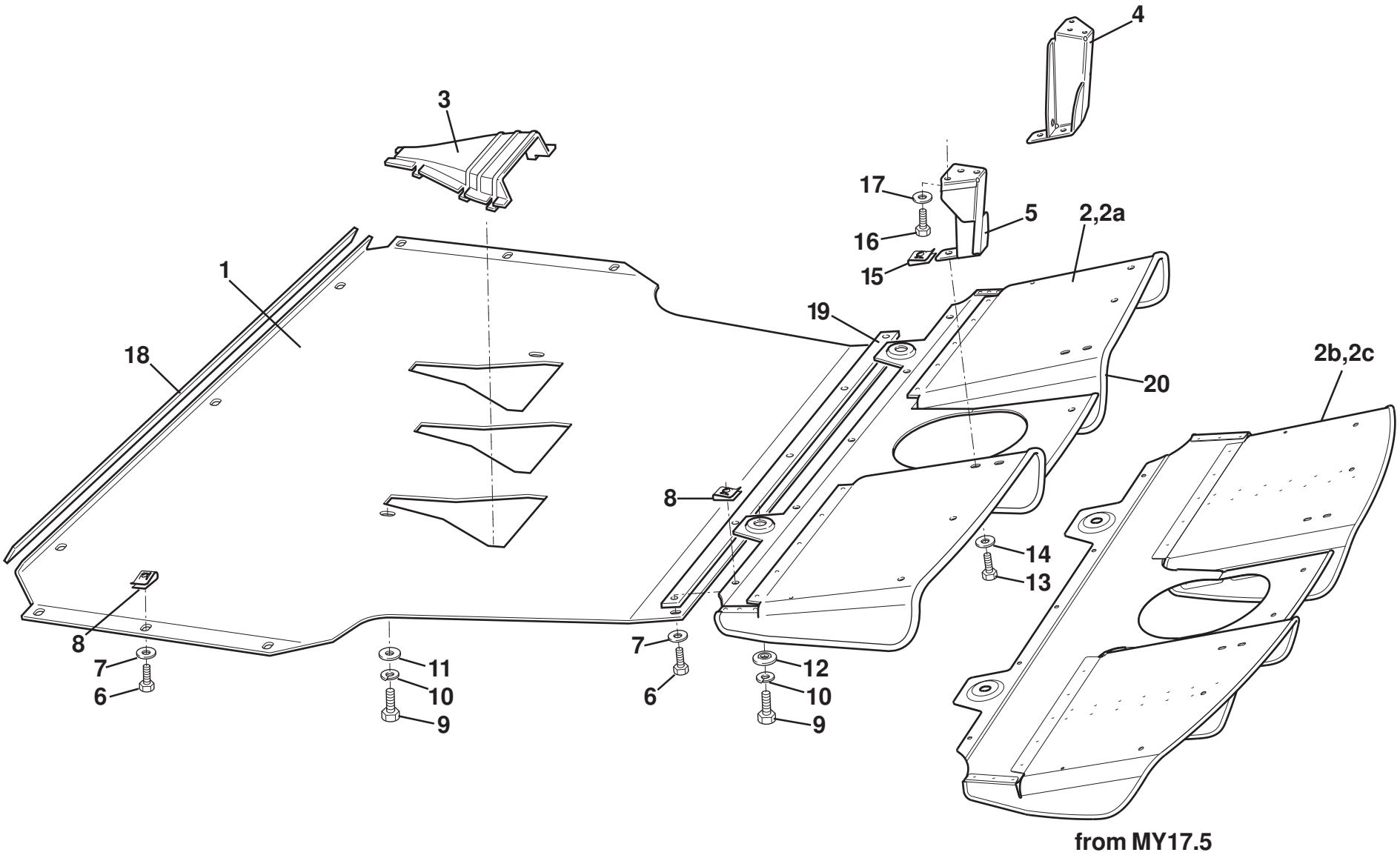

ELISE

10.25a

Updated 3rd April 2017

Service Parts List ELISE

Function Code 10.25a Undertray & Diffuser, Elise 2011 MY

Dep	Part Description	Remarks	Option	Part Number	Qty
01	Undertray Asssembly, silver	Incl. NACA ducts & edging strips		**A120A0165J**	1
01a	Undertray Asssembly, black	Incl. NACA ducts & edging strips		**A120A0167J**	1
02	Diffuser Assembly, silver		Up to MY17.5	**A120A0159J**	1
02a	Diffuser Assembly, black		Up to MY17.5	**A120A0162J**	1
02b	Diffuser Assembly, silver		From MY17.5	**A120A0218J**	1
02c	Diffuser Assembly, black		From MY17.5	**A120A0220J**	1
03	NACA Duct, clip in type			**A116A0143F**	3
04	Bracket, diffuser support, RH			**A120A4016F**	1
05	Bracket, diffuser support, LH			**A120A4015F**	1
06	Screw, M5 x 16, hex. hd. S/S, undertray fixing	Silver undertray		**A111W1163F**	11
06a	Screw, M5 x 16, hex. hd.S/S black, undertray fixing	Black undertray		**A126W1214F**	11
07	Washer, flat, 3/16" x 0.75", S/S, undertray fixing	Silver undertray		**B075W4009Z**	11
07a	Washer, flat, M5 x 19 x 1.4, S/S black, undertray fixing	Black undertray		**B082W4107F**	11
08	Spire Nut, M5, undertray fixing			**B100W6372F**	11
09	Screw, M8 x 25, hex. hd., undertray & diffuser fixing			**A111W1156F**	4
10	Washer, spring, M8, undertray & diffuser fixing			**A075W4036Z**	4
11	Washer, flat, M8 x 25 x 1.4, undertray fixing			**A075W4021Z**	2
12	Spacer, screw to diffuser			**A120A0121F**	2

Updated 4th September2017

Function Code 10.25a Undertray & Diffuser, Elise 2011 MY

Dep	Part Description	Remarks	Option	Part Number	Qty
13	Screw, M5 x 16, hex. hd., diffuser to bracket	Silver diffuser		**A111W1163F**	4
13a	Screw, M5 x 16, hex. hd.S/S black, undertray fixing	Black diffuser		**A126W1214F**	4
14	Washer, flat, 3/16" x 0.75", diffuser to bracket	Silver diffuser		**B075W4009Z**	4
14a	Washer, flat, M5 x 19 x 1.4, S/S black, undertray fixing	Black diffuser		**B082W4107F**	4
15	Spirenut, M5, diffuser to bracket			**A117W6715F**	4
16	Screw, M5 x 16, hex. hd., bracket to clamshell			**A111W1163F**	6
17	Washer, flat, 3/16" x 0.75", bracket to clamshell			**B075W4009Z**	6
18	Foam Strip, self adhesive, 10mm x 6mm			**A100B0431V**	As req.
19	Foam Strip, self adhesive, 19mm x 3mm			**A082U6067F**	As req.
20	Edging Strip. Diffuser, silver*			**A117A0050V**	As req.
20a	Edging Strip. diffuser, black*			**A122A0029V**	As req.
		Note: other diffuser fixings shown with rear grille in section 12.03a			
		*Use adhesive: GE-Bayer Silicons, RTV 108 clear			

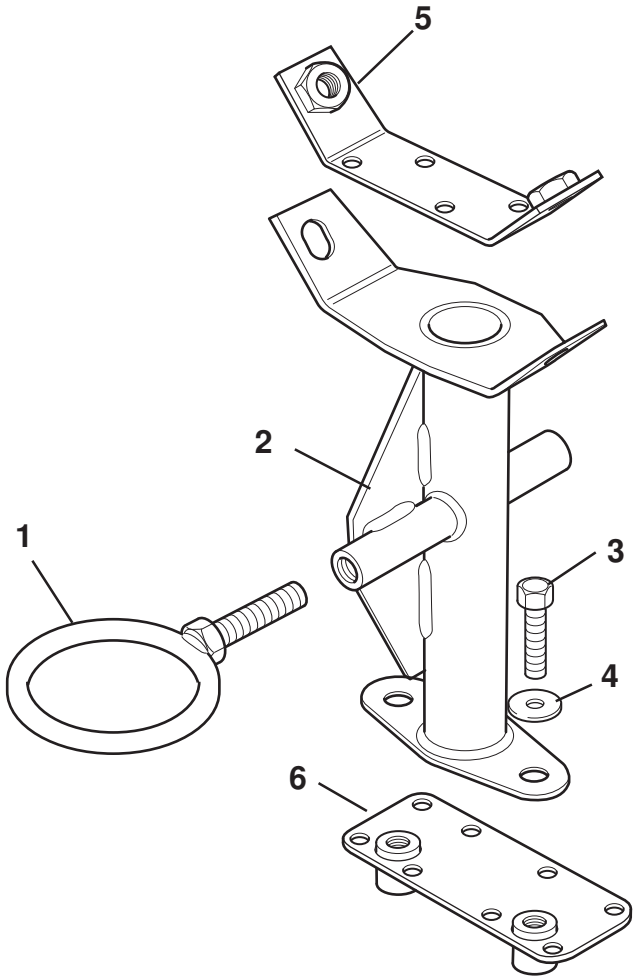
5
2
1
3
4
6

Function Code 10.31 Towing Strut/ Hook

Dep	Part Description	Remarks	Option	Part Number	Qty
01	Towing Eye	Stowed in tool kit		**B111B0399F**	1
02	Mounting Strut, towing eye	For nutplates items 6, 7		**A120U0092F**	1
03	Setscrew, M8 x 25, hex. hd., grade 8.8 Zn			**A120W1000F**	4
04	Washer, flat, M8 x 1.4 Zn			**A075W4021Z**	4
05	Nutplate, bonded, upper towing strut	Bonded to crash structure		**A120B0203F**	1
07	Nutplate, bonded, lower towing strut	Bonded to crash structure		**A120B0200F**	1

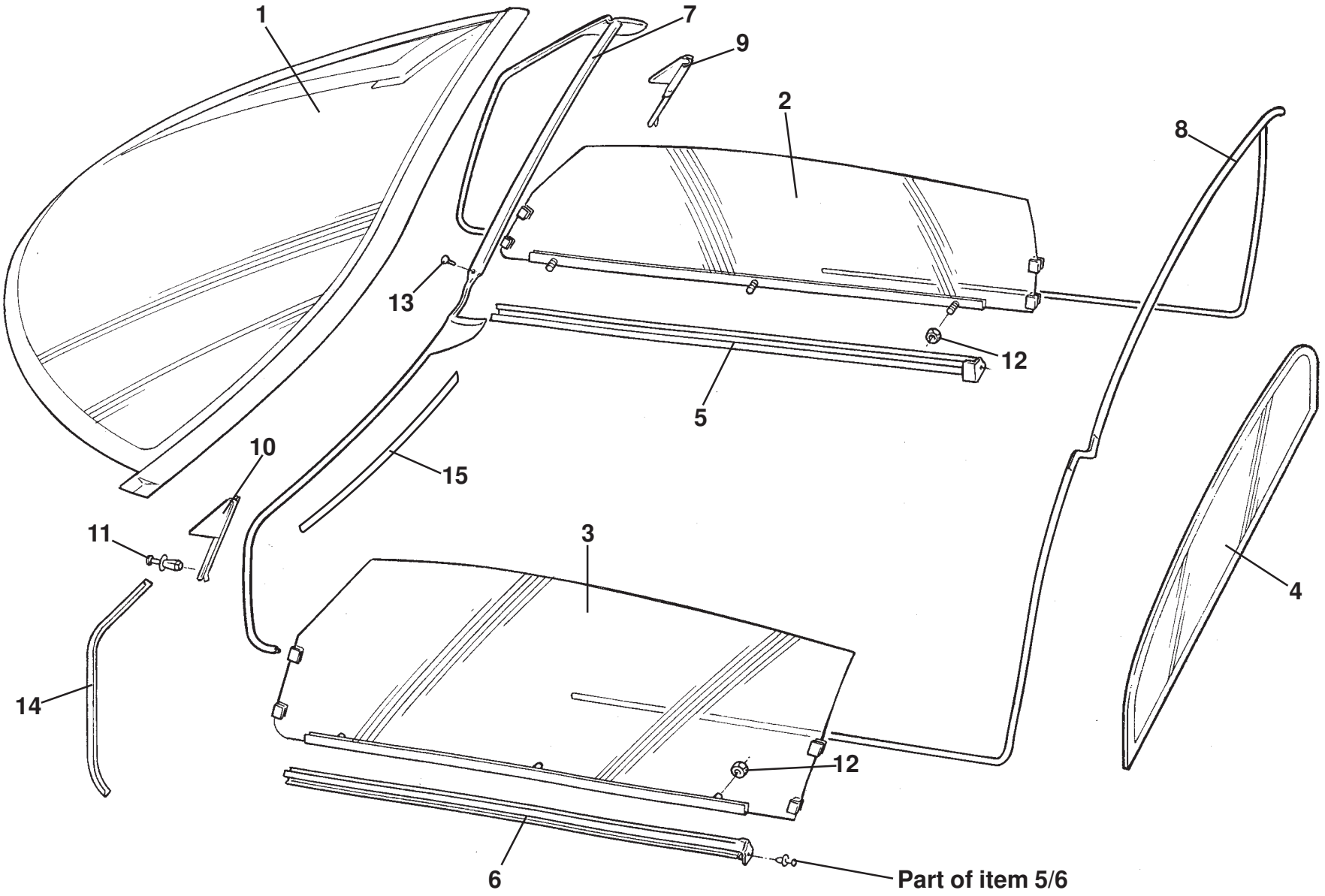

ELISE

11.01

Service Parts List ELISE

Function Code 11.01 Windscreen, Door Glass, Seals & Weather Strips

Dep	Part Description	Remarks	Option	Part Number	Qty
01	Windscreen & Finisher Assembly			**A117B0094F**	1
01a	Windscreen & Finisher Assembly, solar	No green tinted band	Gulf States only	**A128B0156F**	1
02	Door Glass Assembly, RH			**F116B0186F**	1
03	Door Glass Assembly, LH			**F116B0185F**	1
04	Rear Window, glass	Bonded to bulkhead		**A117B0138F**	1
04a	Rear Window, polycarbonate	Bonded to bulkhead	MY17.5 sprint	**A138B0630F**	1
05	Seal Assembly, door waist, RH	Includes plastic fastener		**B117U0010F**	1
06	Seal Assembly, door waist, LH	Includes plastic fastener		**B117U0009F**	1
07	Door Front/Roof Seal Assembly			**A116V0273F**	1
08	Door Rear/Roof Seal Assembly			**A116V0098F**	1
09	Door Cheater Seal, RH			**B117U0134F**	1
10	Door Cheater Seal, LH			**B117U0133F**	1
11	Plastic Fastener, cheater seal fix.			**A079W6195F**	2
12	Nyloc Nut, M6, glass to lift channel			**A907E6285F**	6
13	Plastic Fastener, header seal fix.			**A116W6722F**	2
14	Secondary Door Seal, 600mm, front	Front inside face of door		**A117U0429V**	2
15	Seal 'A' Pillar, noise reduction, LH			**A117U0508F**	1
15a	Seal 'A' Pillar, noise reduction, RH			**A117U0509F**	1

Function Code 11.01 Windscreen, Door Glass, Seals & Weather Strips

Dep	Part Description	Remarks	Option	Part Number	Qty
16	Loctite 382 Adhesive, cheater/waist seals to door	Not illustrated		**A111B6098V**	20gm

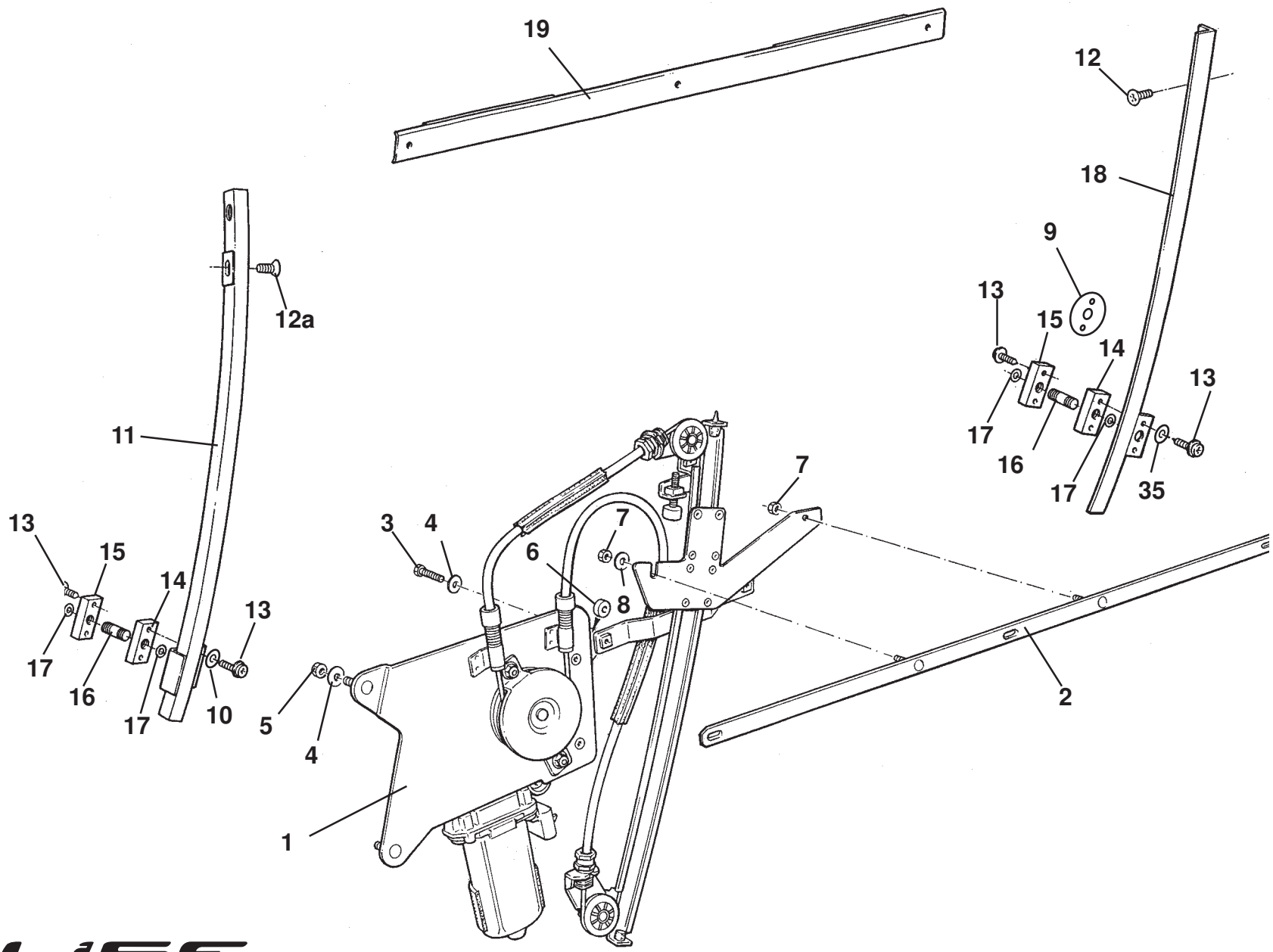
19
12
18
9
13
15
14
13
17
16
17
35
12a
11
13
15
14
13
17
16
17
10
3
4
7
6
8
7
5
4
1
2

ELISE

11.02

Function Code 11.02 Door Window Lift Mechanism

Dep	Part Description	Remarks	Option	Part Number	Qty
01	Window Lift Mechanism, electric, LH			**B117U0389F**	1
01a	Window Lift Mechanism, electric, RH			**B117U0390F**	1
02	Studplate Adaptor, mechanism to glass			**B117U0391H**	2
03	Screw, M6 x 20, hex. hd., mechanism to door			**A075W1030Z**	6
04	Washer, flat, M6 x 15 x 1.5, mechanism to door			**A075W4015Z**	10
05	Nyloc Nut, M6, thin, motor to door			**A907E6285F**	4
06	Spacer, 4mm, lift channel to door			**A117W4194F**	6
07	Nyloc Nut, M6, thin, studplate to mechanism			**A907E6285F**	4
08	Washer, flat, M6 x 15 x 1.5, studplate to mechanism			**A075W4015Z**	2
09	Washer, shakeproof			**A075W4046Z**	2
09	Plate, adjuster block to door rear			**A116B0437F**	2
10	Washer, flat,,M6 x 20 x 2.5			**A075W4016Z**	2
11	Guide Rail, door glass, front, LH			**C116U0007F**	1
11a	Guide Rail, door glass, front, RH			**C116U0006F**	1
12	Screw, M5 x 12, csk. pozi.., rail to door rear			**A100W5196F**	2
12a	Screw, M5 x 12, csk. cap hd., rail to door front	Black dacromet finish		**A117W7207F**	2
13	Screw, No,8 x 0.75", flg. pozi, hd., block fixing			**A075W5074Z**	16
14	Adjuster Block, guide rail LH thread			**A116U0020F**	4
15	Adjuster Block, guide rail RH thread			**A116U0021F**	4
16	Stud, rail adjusting			**A116U0022F**	4
17	'O' Ring			**A116U0023F**	8

Function Code 11.02 Door Window Lift Mechanism

Dep	Part Description	Remarks	Option	Part Number	Qty
18	Guide Rail, door glass, rear, LH			**D116U0005F**	1
18a	Guide Rail, door glass, rear, RH			**D116U0004F**	1
19	Glass Carrier Channel			**B116U0130F**	2
20	Tape, self adhesive, downstop to door	Not illustrated		**A100B6142V**	0.25M
21	Downstop, door glass	Not illustrated, bonded to door		**A116B0314F**	2

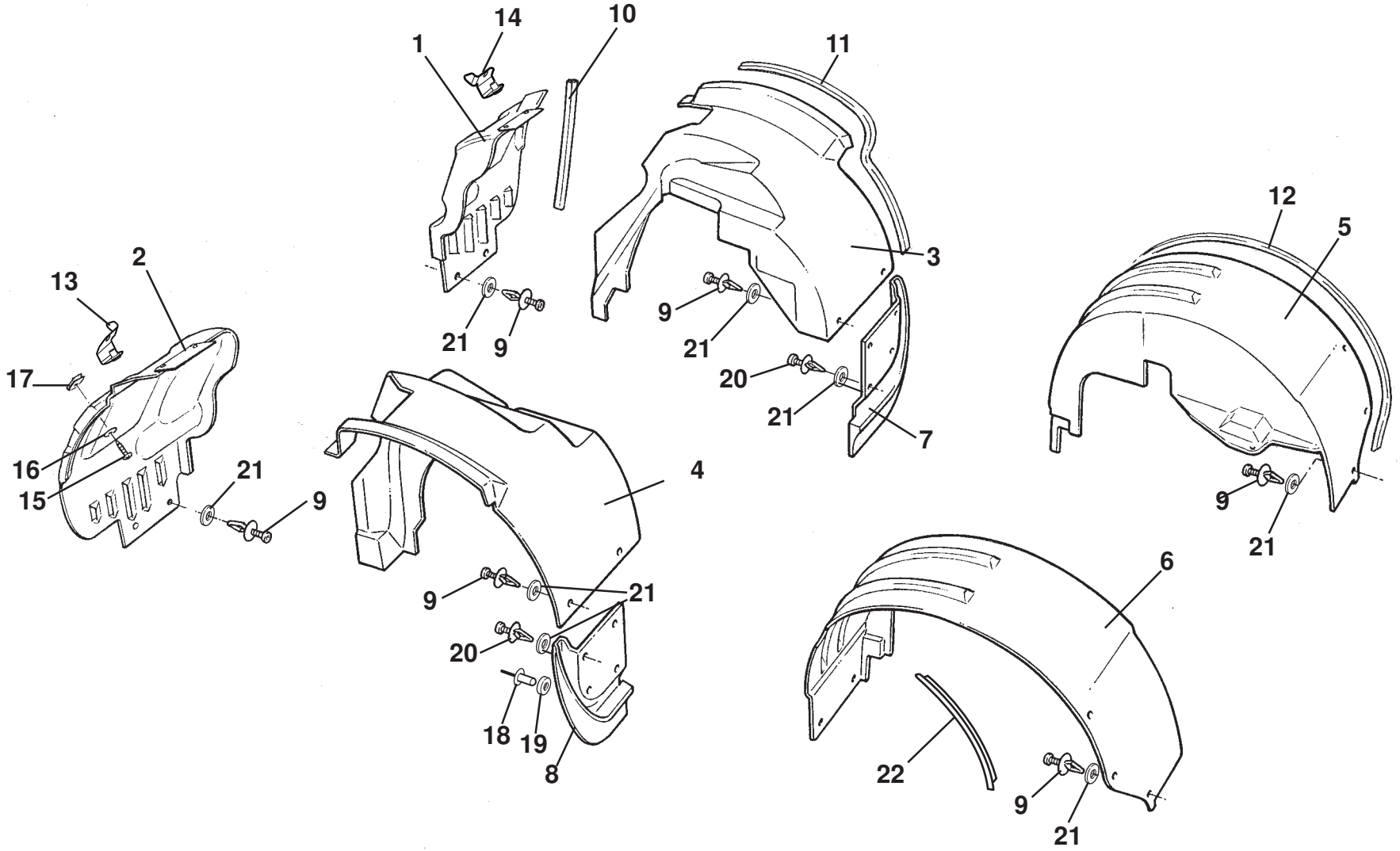

ELISE

12.01

Function Code 12.01 Wheelarch Liners

Dep	Part Description	Remarks	Option	Part Number	Qty
01	Panel, headlamp access, front wheelarch, RH			**D122B0192F**	1
02	Panel, headlamp access, front wheelarch, LH			**D122B0191F**	1
03	Wheelarch Liner, front, RH, LHD			**C120B0112F**	1
03b	Wheelarch Liner, front, RH, RHD			**B120B0004F**	1
04	Wheelarch Liner, front, LH, LHD			**B120B0113F**	1
04b	Wheelarch Liner, front, LH, RHD			**C120B0003F**	1
04e	Wheelarch Liner, front, LH, RHD, LHD		Bosch, ABS from vin BH_10931	**A120B0415F**	1
05	Wheelarch Liner, rear, RH			**B120B0030F**	1
06	Wheelarch Liner, rear, LH			**B120B0031F**	1
07	Mudflap, front, RH			**D117B0172F**	1
08	Mudflap, front, LH			**D117B0171F**	1
09	Plastic Fastener, liners retention			**A120W6848F**	18
10	Weatherseal, front access panel			**A089U6055F**	895mm
11	Weatherseal, front liner	Cut to fit		**A089U6055F**	As req.
12	Weatherseal, rear liner	Cut to fit		**A089U6055F**	As req.
13	Bracket Assembly, headlamp access cover, LH			**A120B4107F**	1
14	Bracket Assembly, headlamp access cover, RH			**A120B4108F**	1
15	Screw M6 x 16. hex flg hd			**A918W5208F**	4

Function Code 12.01 Wheelarch Liners

Dep	Part Description	Remarks	Option	Part Number	Qty
16	Washer, flat, M6 x 25 x 1.4 s/s blk			**A082W4131F**	4
17	Spirenut, No.8, panel fixing	On clamshell bracket		**A075W6172F**	2
18	Pop Rivet, mudflap to body			**A075W6092Z**	4
19	Cup Washer, black nylon, mudflap to body			**A082W6482F**	4
20	Plastic Fastener, mudflap retention			**A100W6481F**	8
21	Washer, flat, M8 x 21 x 1.6, S/S black			**A111W4159F**	26
22	Wheelarch Extension Lip, rear, LH	8.0 rear wheels		**A128B4011F**	1
22a	Wheelarch Extension Lip, rear, RH	8.0 rear wheels		**A128B4012F**	1

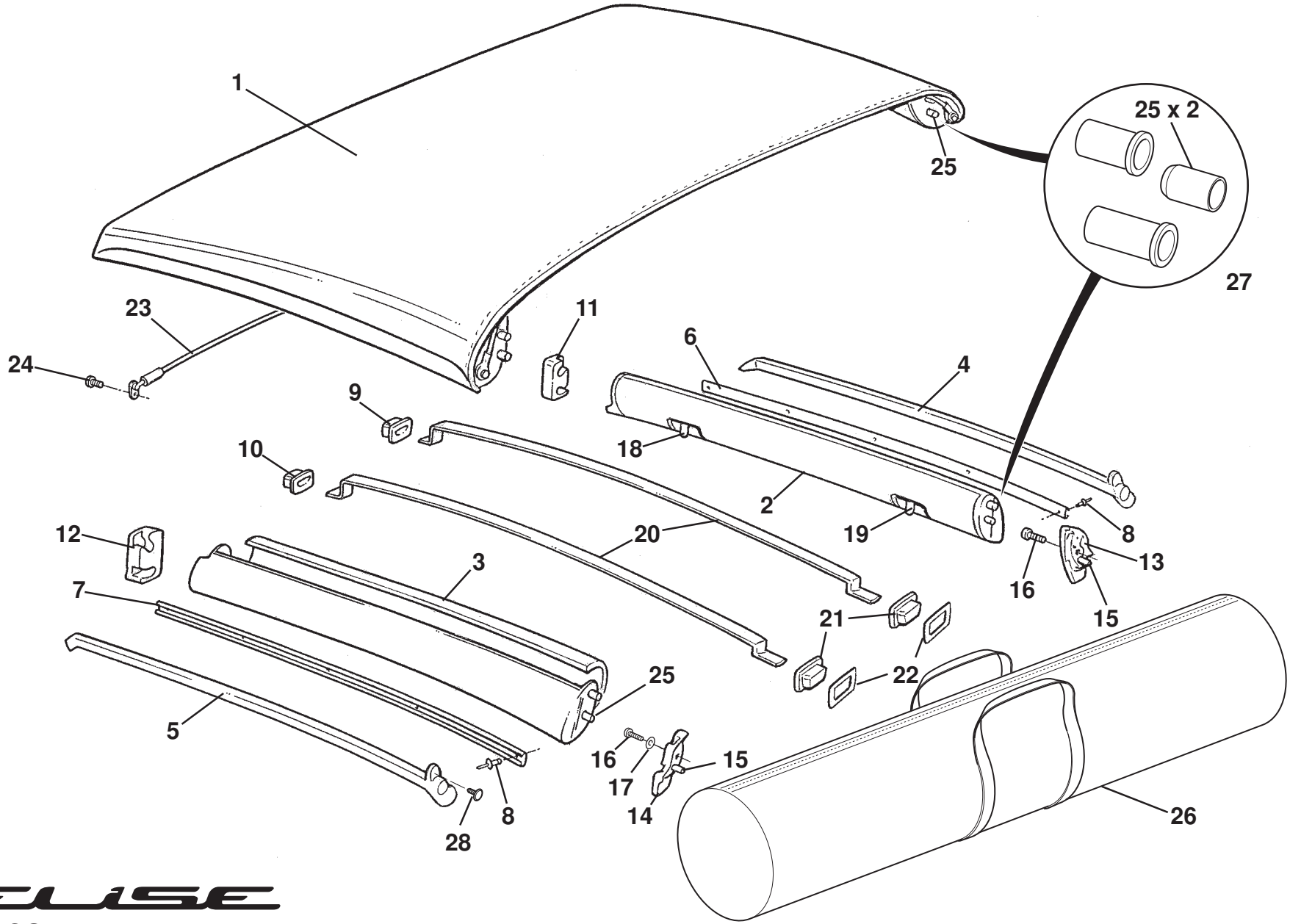

ELISE

12.02

Updated 5th June 2017

Function Code 12.02 Soft Top Roof, Cant Rails, Roof Bows

Dep	Part Description	Remarks	Option	Part Number	Qty
01d	Soft Top Roof Assembly, NVH, short			**A120B0199F**	1
01e	Soft Top Roof Assembly, NVH, short		Blue	**A120B0131F**	1
01f	Soft Top Roof Assembly, NVH, short		Red	**A120B0129F**	1
01g	Soft Top Roof Assembly, NVH, short		Green	**A120B0130F**	1
01h	Soft Top Roof Assembly, insulated, short	High temperature	Gulf States	**A120V0350F**	1
02a	Trim Panel, cant rail, RH	Not Available		**A120V0302H**	1
03a	Trim Panel, cant rail, LH	Not Available		**A120V0301H**	1
04	Weatherseal, RH			**A116V0092H**	1
05	Weatherseal, LH			**A116V0091H**	1
06	Seal Carrier, RH			**B116V0088F**	1
07	Seal Carrier, LH			**B116V0089F**	1
08	Pop Rivet, seal carrier to cant rail			**A116V0090H**	12
09	Pocket, stay to header rail, RH	Bonded to windscreen frame		**A116B0184F**	1
10	Pocket, stay to header rail, LH	Bonded to windscreen frame		**A116B0183F**	1
11	Latch Plate, front, RH	Bonded to windscreen frame		**A116B0002F**	1
12	Latch Plate, front, LH	Bonded to windscreen frame		**A116B0001F**	1
13	Latch Plate, with tongue, rear, RH	Also fixing for hard top		**C116B0466F**	1
14	Latch Plate, with tongue, rear, LH	Also fixing for hard top		**C116B0467F**	1
15	Dowel Pin, plate to roll-over bar			**A116W6659F**	2
16	Screw, M6 x 20, cap hd., black, latch plate to roll-over bar			**A082W7041F**	2
17	Washer, wavy, 1/4", latch plate to roll-over bar			**A075W4087F**	2

Function Code 12.02 Soft Top Roof, Cant Rails, Roof Bows

Dep	Part Description	Remarks	Option	Part Number	Qty
18	Latch Assembly, front, RH			**B117B0154H**	1
18a	Latch Assembly, front, LH			**B117B0155H**	1
19	Latch Assembly, rear, RH			**B117B0156H**	1
19a	Latch Assembly, rear, LH			**B117B0157H**	1
20	Stay, soft top supporting			**B116V0095H**	2
21	Pocket, stay to rear window shroud			**A116B0182F**	2
22	Spacer, pocket to shroud		If fitted	**B117B0480K**	2
23	Cable, soft top tensioning		End adjusting	**B116V0064H**	2
23a	Cable, soft top tensioning, rear	Soft tops with centre access flap	Centre adjusting	**C116V0064H**	1
24	Screw, cables to soft to assy.			**A111W7150F**	4
25	End Cap, latching pin			**A116V0150H**	4
26	Soft Top Stowage Bag			**A120V0314H**	1
27	Soft Top Cap Set, cant rail	Includes item 25, set supplied per side		**A120B0470S**	2
28	Firtree, weatherseal			**A116W6722F**	2
29	Soft Top Care Kit, hood cleaner & hood protector	Not illustrated		**A117U6021S**	2 x 500ml

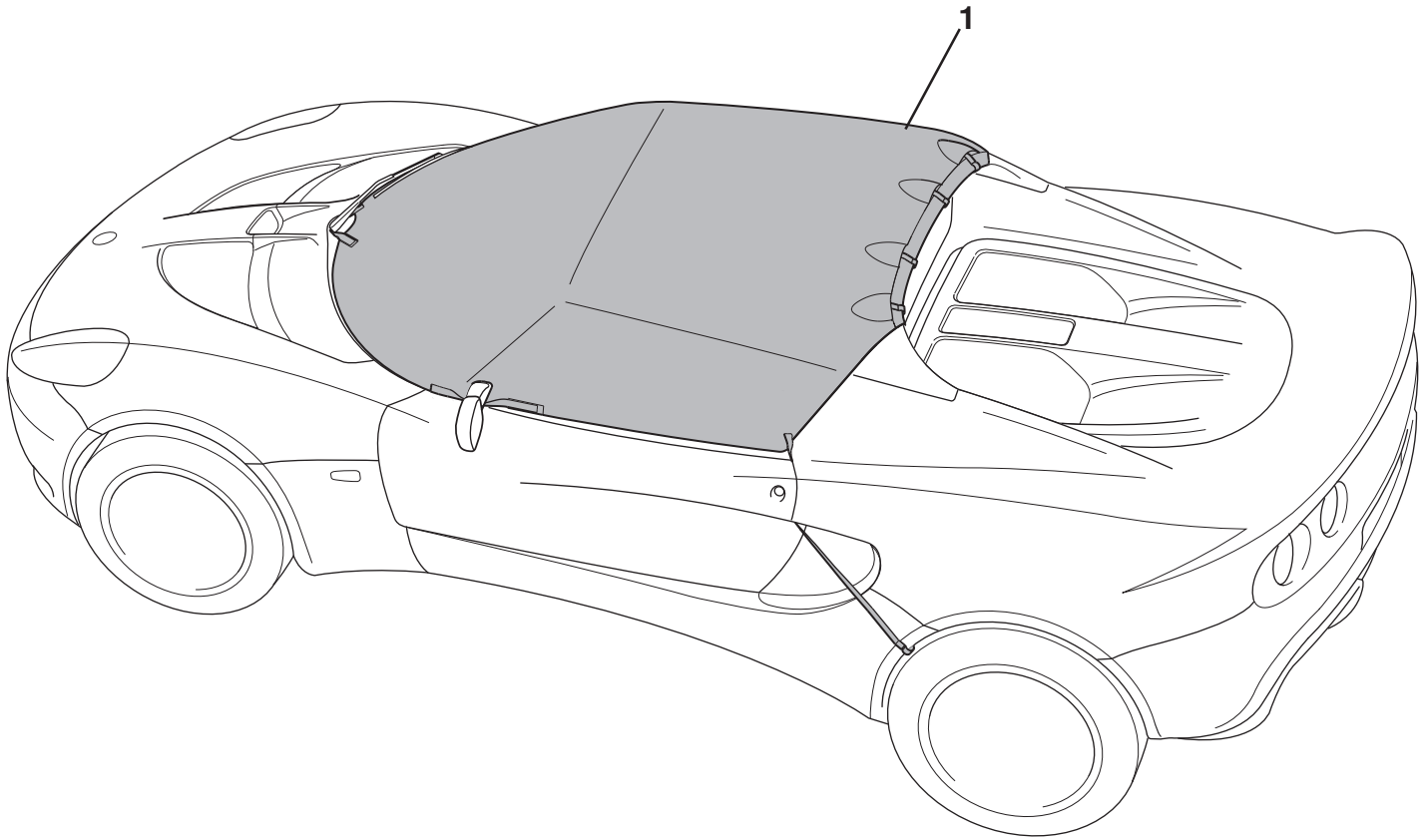

ELISE

12.02c

Function Code 12.02c Dust and Shower Covers

Dep	Part Description	Remarks	Option	Part Number	Qty
01	Cover Shower Cap	CR logo	Elise Club Racer '11` MY	**A120X6001F**	1
01a	Cover Shower Cap	Lotus logo	Elise S Club Racer	**B120X6001F**	1

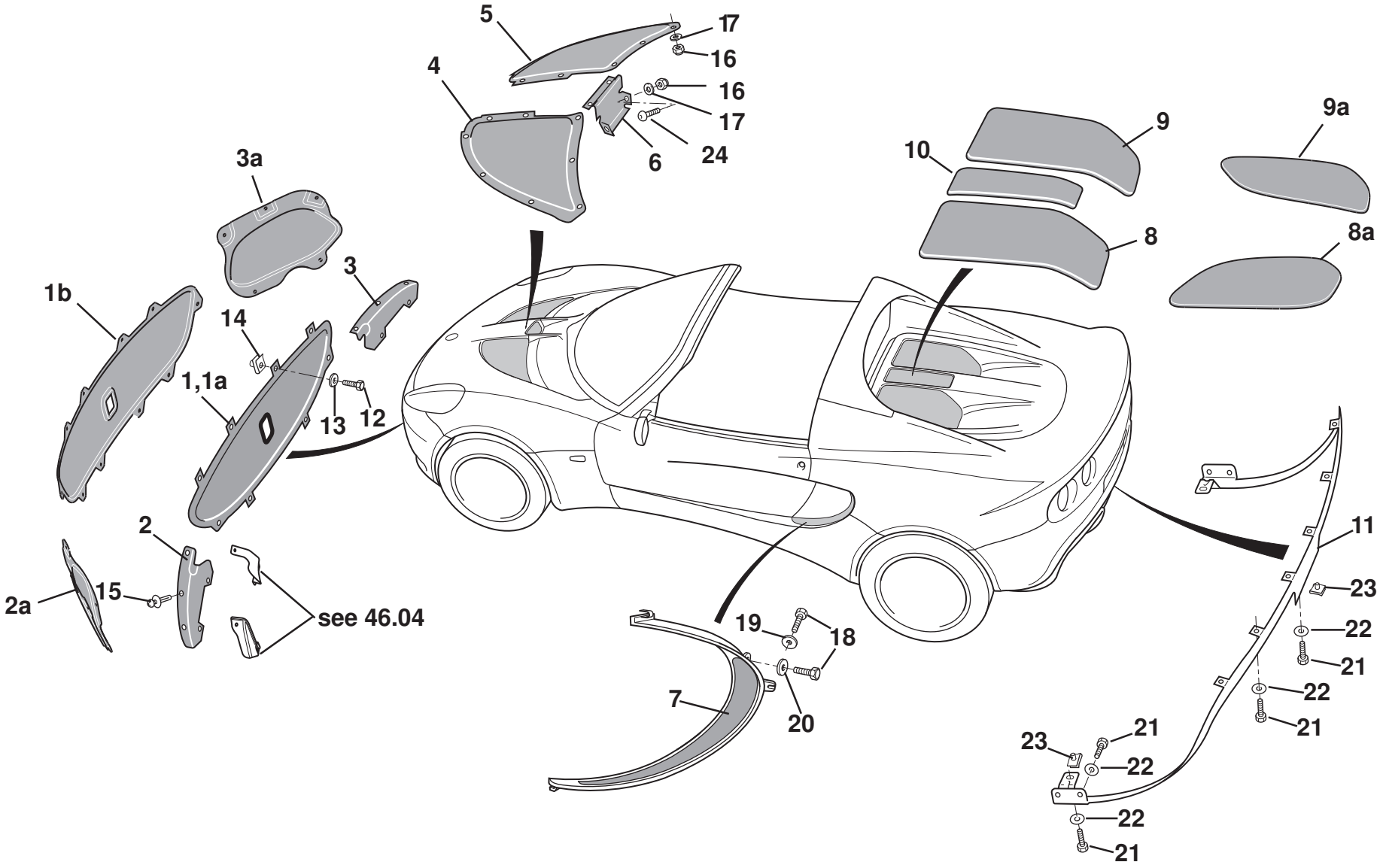

ELISE

12.03a

Updated 3rd April 2017

Service Parts List ELISE

Function Code 12.03a Grilles and Louvres, Elise 2011 MY

Dep	Part Description	Remarks	Option	Part Number	Qty
01	Grille, front intake, centre, without driving lamps		Up to MY17.5	**B120B0274F**	1
01a	Grille, front intake, centre, with driving lamps		Up to MY17.5	**B120B0276F**	1
01b	Grille, front intake, centre, without driving lamps		From MY17.5	**A147B0010F**	1
02	Grille, front intake, LH		Up to MY17.5	**A120B4015F**	1
02a	Grille, front intake, LH		From MY17.5	**A147B4003F**	1
03	Grille, front intake, RH		Up to MY17.5	**A120B4016F**	1
03a	Grille, front intake, RH		From MY17.5	**A147B4004F**	1
04	Grille, front exit, LH			**B120B4039F**	1
05	Grille, front exit, RH			**B120B4040F**	1
06	Grille, front exit, centre			**B120B0268F**	1
07	Grille Assembly, side intake, LH			**C120B4041J**	1
07a	Grille Assembly, side intake, RH			**C120B4042J**	1
08	Grille, engine cover, LH			**A120B4047F**	1
08a	Grille, engine cover, LH		Carbon cover	**A120B4173F**	1
09	Grille, engine cover, RH			**A120B4048F**	1
09a	Grille, engine cover, RH		Carbon cover	**A120B4174F**	1
10	Grille, engine cover, centre			**A120B0255F**	1
11	Grille, diffuser to body			**A120B0292F**	1

Function Code 12.03a Grilles and Louvres, Elise 2011 MY

Dep	Part Description	Remarks	Option	Part Number	Qty
12	Screw, no. 8, self tapping, flg. pozi., grille to clam.			**A117W5250F**	8
13	Washer, flat, 3/16 x 3/4", S/S, grille to clam.			**B075W4009Z**	8
14	Spirenut, no. 8, grille to clam.			**A075W6016Z**	8
15	Plastic Fastener, side intake grilles to clam.			**A100W6391F**	10
16	Nyloc Nut, M6, thin, grillles to clam.			**A907E6285F**	20
17	Washer, flat, M6 x 18, grilles to clam.			**B082W4018F**	20
18	Screw, M6 x 16, hex. hd., side grille to clamshell			**A075W1028Z**	3
19	Washer, flat, M6 x 25, side grille to clamshell			**B075W4017Z**	2
20	Washer, flat, M6 x 18, side grille to clamshell			**B082W4018F**	2
21	Screw, M5 x 16, hex. hd., S/S, grilles to clam./diffuser			**A111W1163F**	18
22	Washer, flat, 3/16" x 0.75", grilles to clam./diffuser			**B075W4009Z**	18
23	Spirenut, M5, grille to diffuser			**A117W6715F**	8
24	Screw M6 x 16 btn cap s/s blk, front exit grille centre			**A082W7105F**	2

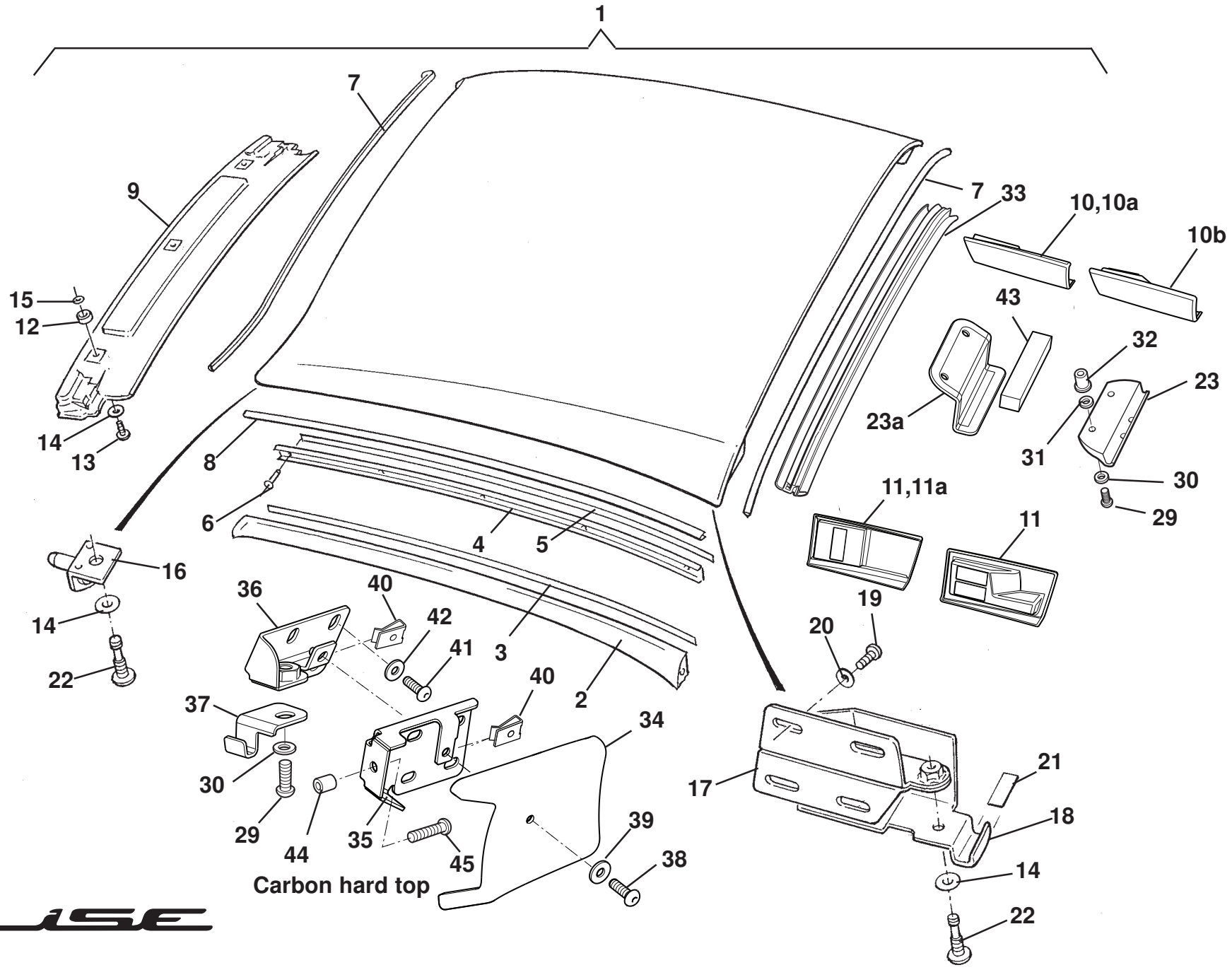

ELISE

12.04

Updated 4th June 2018

Function Code 12.04 Roof Panel, Seals & Fixings

Dep	Part Description	Remarks	Option	Part Number	Qty
01	Hard Top Roof Assembly Complete	Quote Lotus Paint Code with order*	Painted, trimmed	**A121B0074J**	1
01a	Hard Top Roof Assembly Complete, carbon			**A120B0619J**	1
01b	Headlining, black	Not illustrated, sold by the sq metre order 2 metres		**A120V6024V**	2m
02	Seal, hard top to side glass, LH			**A116V0249F**	1
02a	Seal, hard top to side glass, RH			**A116V0248F**	1
03	Double Sided Tape, 5mm, seal to carrier	Cut to fit		**A117B0362V**	As req.
04	Seal Carrier, LH			**A116V0241F**	1
04a	Seal Carrier, RH			**A116V0240F**	1
05	Double Sided Tape, 12mm, carrier to hard top	Cut to fit, 2 strips per side		**C075U6071V**	As req.
06	Pop Rivet, seal carrier to hard top			**A116W6707F**	12
07	Seal, 'D' section, self adhesive, hard top front & rear	5mm thick		**A117U6007F**	2
07a	Seal, 'D' section, self adhesive, hard top front & rear	8mm thick		**B116U0211F**	2
08	Edging Strip, hard top sides			**A120U0097F**	2
09	Trim/Clamp Panel, front, hard top to screen header			**A116B1078J**	1
10	Cover Assembly Hardtop, rear RH, trimmed	Brushed Nylon	Non carbon roof	**F116B0470J**	1
10a	Cover Assembly Hardtop, rear RH, trimmed	Velcar	Non carbon roof	**A120B4219S**	1
10b	Cover Assembly Hardtop, rear RH, trimmed	Velcar	Non carbon roof from approx dec 2017	**A138V4380J**	1

Function Code 12.04 Roof Panel, Seals & Fixings

Dep	Part Description	Remarks	Option	Part Number	Qty
11	Cover Assembly Hardtop, rear LH, trimmed	Brushed Nylon	Non carbon roof	**F116B0469J**	1
11a	Cover Assembly Hardtop, rear LH, trimmed	Velcar	Non carbon roof	**A120B4220S**	1
11b	Cover Assembly Hardtop, rear LH, trimmed	Velcar	Non carbon roof from approx dec 2017	**A138V4379J**	1
12	Spacer, plastic, panel to header			**B116V0221F**	3
13	Screw, M8 x 20, button hd. torx, clamps & frontcover fixing	Black finish		**A116W5258F**	5
14	Washer, flat, M8 x 21 x 1.6, clamps & front cover fixing	Black finish		**A111W4159F**	5
15	Retainer, nylon, screws to clamps & front cover			**A116W4189F**	5
16	Pin Clamp, hard top front			**A116V0350F**	2
16a	Sleeve, pin clamp to latch plate	See Service Bulletin 2005/07		**A117U0507F**	2
17	Bracket Assembly, clamp to hard top rear LH			**B116V0177F**	1
17a	Bracket Assembly, clamp to hard top rear RH			**B116V0178F**	1
18	Hook Clamp, hard top rear, LH			**B116V0349J**	1
18a	Hook Clamp, hard top rear, RH			**B116V0348J**	1
19	Screw, M6 x 16, pan hd. torx, rear brackets to hard top	Black finish		**A116W5260F**	8
20	Washer, flat, M6 x 12 x 1.5, rear brackets to hard top	Black finish		**B100W4127F**	8
21	Foam Tape, self adhesive, anti-rattle	Cut to fit		**A036B6221V**	0.12M
22	Clunk Bolt, M8 x 35, torx, hardtop fixing	Black finish		**C121B0083F**	4
23	Clamp, rear retention			**A120V0296J**	1
23a	Clamp Assembly, trimmed, rear retention		Carbon roof	**A120B0681K**	1
23b	Clamp Kit, rear retention	Includes fixings items 29-31		**A120V0347S**	1

Function Code 12.04 Roof Panel, Seals & Fixings

Dep	Part Description	Remarks	Option	Part Number	Qty
24	Tool, torx screws fixing (M6 & M8)	Not illus.part of hard top kit		**B116V6001F**	1
25	Tool Bag, tool retaining	Not illustrated		**B116V0028F**	1
26	Hard Top Stowage Bag	Not illustrated		**A116V0228F**	1
27	Rubber Buffer, hard top to rear latch plates	Not illus., see Service Bulletin 2005/07		**A117B0719F**	2
28	Carbaflo XTR5 precision oiler	Not illustrated, squeak prevention		**A117B6103S**	1
29	Screw M8 x 20, torx,			**A116W5258F**	4
30	Washer M8 x 21x 1.6, s/s blk,			**A111W4159F**	4
31	Captive Washer M8			**A116W4189F**	2
32	Insert M8			**A117W6718F**	2
33	Seal, hard top to rollhoop			**A120B6084F**	1
34	Carbon Roof Cover LH		Carbon roof	**A120V4209J**	1
34a	Carbon Roof Cover RH		Carbon roof	**A120V4210J**	1
35	Mounting Bracket, hardtop rear LH	4 hole fixing to roof	Carbon roof	**A120B4175F**	1
35a	Mounting Bracket, hardtop rear RH	4 hole fixing to roof	Carbon roof	**A120B4176F**	1
36	Mounting Bracket, hardtop rear LH	3 hole fixing to roof	Carbon roof	**A120B4197F**	1
36a	Mounting Bracket, hardtop rear RH	3 hole fixing to roof	Carbon roof	**A120B4198F**	1
37	Hook Hard Top SBAF LH		Carbon roof	**A120B4195F**	1
37a	Hook Hard Top SBAF RH		Carbon roof	**A120B4196F**	1
38	Screw M5 x 16 btn hd			**A111W7156F**	2
39	Washer Flat 3/16 x 17g			**A082W4129F**	2

Function Code 12.04 Roof Panel, Seals & Fixings

Dep	Part Description	Remarks	Option	Part Number	Qty
40	Speed Nut M5			**A132W3015F**	2
41	Screw M6 x 16 btn hd			**A082W7105F**	6
42	Washer M6 x 16 x 1.5 s/s blk			**A082W4133F**	6
43	Neoprene Strip, 25 x 12.5mm			**A054B6110V**	1
44	Spacer			**A138B0541F**	2
45	Screw M6 x 30 skt btn hd			**A132W5026F**	2
		*Use Hardtop order form located on the dealer portal			

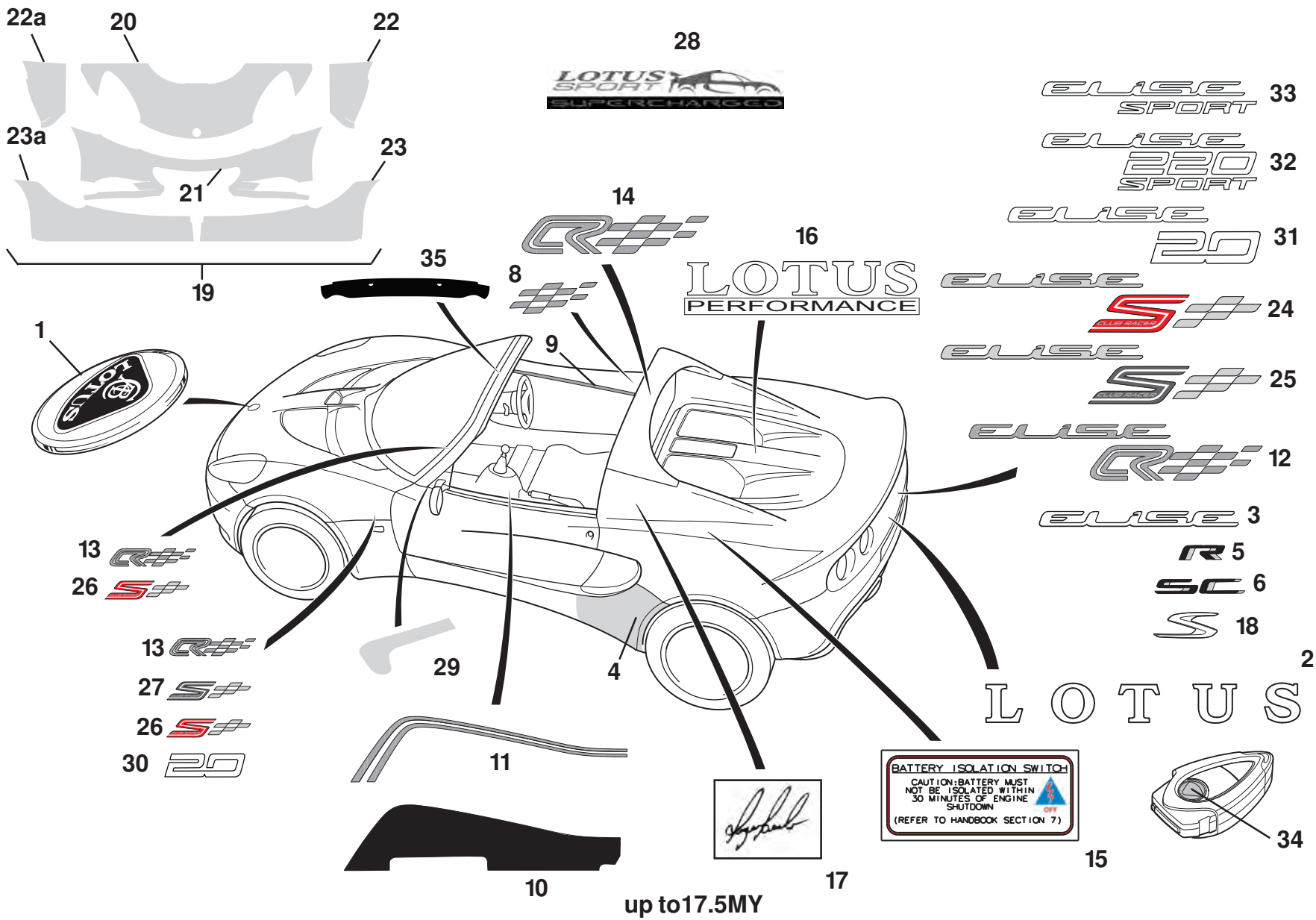

ELISE

12.05a page1

Updated 3rd April 2017

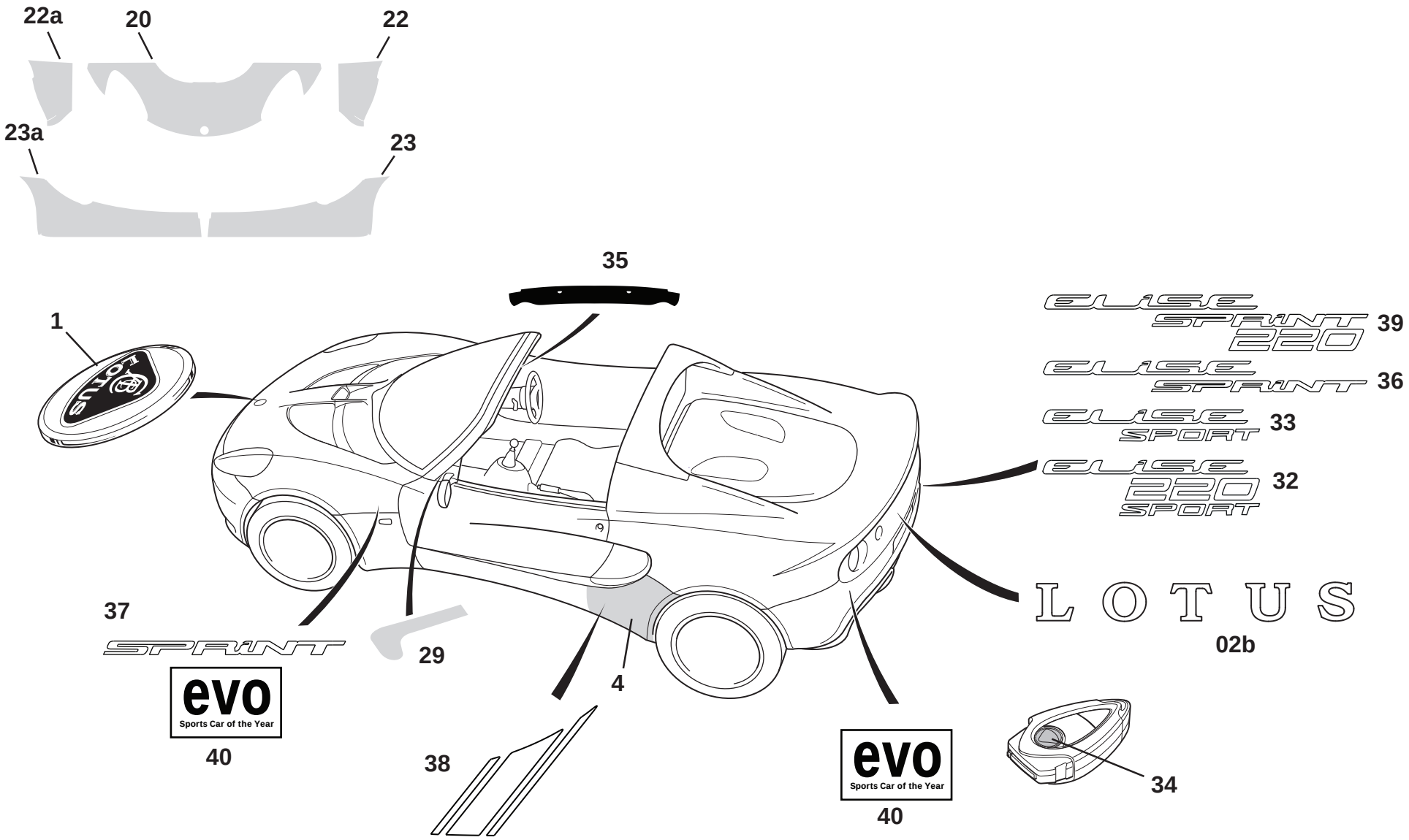

from 17.5MY

ELISE

12.05a page2

Updated 1st October 2018

Function Code 12.05a Decals, Badges & Protective Film, Elise 2011 MY

Dep	Part Description	Remarks	Option	Part Number	Qty
01	Nose Badge, Lotus logo		Up to Vin BH_11884	**A117U0170F**	1
01a	Nose Badge, Lotus logo		From Vin BH_11885	**B117U0170F**	1
01b	Nose Badge, Lotus logo black/silver		RGB special edition	**A120U0169F**	1
02	Badge, L O T U S, 'chrome' letters	On rear transom		**B124B0326F**	1
02a	Decal 'L O T U S' silver 537mm long	On rear transom	Elise Club Racer '11 MY	**A120B0452F**	1
02b	Decal, 'L O T U S', raised letters light grey 554mm long	On rear transom		**A138U0132F**	1
02c	Decal, 'L O T U S', raised letters dark grey 554mm long	On rear transom		**A138U0133F**	1
03	Badge, Elise, 'chrome'	On rear clamshell		**A120U0150F**	1
04	Film, sill protection, clear, LH			**A117B0707F**	1
04a	Film, sill protection, clear, RH			**A117B0706F**	1
05	Decal 'R', black, silver shadow	On rear clamshell	Elise R	**A120B0377F**	1
05a	Decal 'R', silver, black shadow	On rear clamshell	Elise R	**A120B0376F**	1
06	Decal 'SC', black, silver shadow	On rear clamshell	Elise SC	**A120B0375F**	1
06a	Decal 'SC', silver, black shadow	On rear clamshell	Elise SC	**A120B0374F**	1
07	Identification Plaque	Not available	RGB special edition	**A120U0170F**	1
08	Decal, chequered	LH door inner	Elise Club Racer '11MY', Exige Club Racer '12MY'	**A120U0177F**	1
08	Decal, chequered	LH door inner	Elise Club Racer '11MY', Exige Club Racer '12MY'	**A120U0177F**	1

Function Code 12.05a Decals, Badges & Protective Film, Elise 2011 MY

Dep	Part Description	Remarks	Option	Part Number	Qty
08a	Decal, chequered	RH door inner	Elise Club Racer '11MY', Exige Club Racer '12MY'	**A120U0176F**	1
09	Decal Strip	LH door	Elise Club Racer '11MY', Exige Club Racer '12MY'	**A120U0179F**	1
09a	Decal Strip	RH door	Elise Club Racer '11MY', Exige Club Racer '12MY'	**A120U0178F**	1
10	Decal Black Centre Console LHS		Elise Club Racer '11MY', Exige Club Racer '12MY'	**A120U4079F**	1
10a	Decal Black Centre Console RHS		Elise Club Racer '11MY', Exige Club Racer '12MY'	**A120U4080F**	1
11	Decal Silver Strip Centre Console LHS		Elise Club Racer '11MY', Exige Club Racer '12MY'	**A120U4081F**	1
11a	Decal Silver Strip Centre Console RHS		Elise Club Racer '11MY', Exige Club Racer '12MY'	**A120U4082F**	1
12	Decal 'ELISE CR'	On rear clamshell	Elise Club Racer '11MY', Exige Club Racer '12MY'	**A120B0450F**	1
13	Decal 'CR and chequered, 140mm	Above side repeater lamp, radio blanking plate base model	Elise Club Racer '11MY', Exige Club Racer '12MY'	**A120B0451F**	3
14	Decal 'CR and chequered, 195mm		Elise Club Racer '11MY', Exige Club Racer '12MY'	**A120B0454F**	1
15	Decal Battery Isolator		Elise Club Racer '11MY', Exige Club Racer '12MY'	**A120X0001F**	1
16	Decal, 'LOTUS PERFORMANCE'	On engine cover		**B132U0435F**	1
17	Stencil RGB	RGB logo painted on LHS rear clamshell *	RGB special edition	**A120B0464S**	1
18	Badge 'S'			**A132U0608F**	1

Function Code 12.05a Decals, Badges & Protective Film, Elise 2011 MY

Dep	Part Description	Remarks	Option	Part Number	Qty
19	Chip Protection Accessory Kit		Up to MY17.5	**A120B0394F**	1
20	Chip Protection, front clam			**A120B0392H**	1
21	Chip Protection, front bumper		Up to MY17.5	**A120B0393H**	1
22	Chip Protection, rear wheel arch rear LH			**A120B4117H**	1
22a	Chip Protection, rear wheel arch rear RH			**A120B4118H**	1
23	Chip Protection, side sill LH, full sill length			**A121B4001H**	1
23a	Chip Protection, side sill RH, full sill length			**A121B4002H**	1
24	Decal 'ELISE S CR', red S	On rear clamshell	Elise S Club Racer 2ZR	**A120B0568F**	1
25	Decal 'ELISE S CR', dark gray S	On rear clamshell	Elise S Club Racer 2ZR	**A120B0570F**	1
26	Decal 'S CR', red S	Above side repeater lamp, radio blanking plate base model	Elise S Club Racer 2ZR	**A120B0569F**	3
27	Decal 'S CR', dark gray S	Above side repeater lamp	Elise S Club Racer 2ZR	**A120B0571F**	2
28	Decal, lotus sport supercharged		Supplied as part of supercharger kit	**A120U0133F**	3
29	Film, clear, LH cheater panel, front	Paint body colour		**A120B4031S**	1
29a	Film, clear, RH cheater panel, front	Paint body colour		**A120B4032S**	1
30	'20' Decal Black	Above side repeater lamp	Elise 20th edition	**A120B0589S**	2
30a	'20' Decal White	Above side repeater lamp, radio blanking plate,	Elise 20th edition	**A120B0590S**	3
31	Elise '20' Decal Black	On rear clamshell	Elise 20th edition	**A120B0591S**	1
31a	Elise '20' Decal White	On rear clamshell	Elise 20th edition	**A120B0592S**	1
32	Decal 'ELISE 220 SPORT', black	2ZR	Elise 220 SPORT	**A120U0253F**	1

Function Code 12.05a Decals, Badges & Protective Film, Elise 2011 MY

Dep	Part Description	Remarks	Option	Part Number	Qty
32a	Decal 'ELISE 220 SPORT', white	2ZR	Elise 220 SPORT	**A120U0254F**	1
33	Decal 'ELISE SPORT'	1ZR	Elise SPORT	**A120U0252F**	1
34	Decal Lotus Roundal Key fob			**LOTDS05288**	1
35	Film, blackout, header rail protection.	For airbag label see 19.01		**A116B0319F**	1
36	Decal 'ELISE SPRINT', black	On rear clamshell	MY17.5	**A147U0009F**	1
36a	Decal 'ELISE SPRINT', aluminium	On rear clamshell	MY17.5	**A147U0008F**	1
36b	Decal 'ELISE SPRINT', orange	On rear clamshell	MY17.5	**A147U0019F**	1
36c	Decal 'ELISE SPRINT', red	On rear clamshell	MY17.5	**A147U0021F**	1
37	Decal 'SPRINT', black	Above side repeater lamp	MY17.5	**A147U0011F**	1
37a	Decal 'SPRINT', aluminium	Above side repeater lamp	MY17.5	**A147U0010F**	1
37b	Decal 'SPRINT', orange	Above side repeater lamp	MY17.5	**A147U0020F**	1
37c	Decal 'SPRINT', red	Above side repeater lamp	MY17.5	**A147U0022F**	1
38	Decal Side Stripes, black LH	Rear sill	MY17.5	**A147U4001F**	1
38a	Decal Side Stripes, black RH	Rear sill	MY17.5	**A147U4002F**	1
38b	Decal Side Stripes, aluminium LH	Rear sill	MY17.5	**A147U4003F**	1
38c	Decal Side Stripes, aluminium RH	Rear sill	MY17.5	**A147U4004F**	1
38d	Decal Side Stripes, orange LH	Rear sill	MY17.5	**A147U4005F**	1
38e	Decal Side Stripes, orange RH	Rear sill	MY17.5	**A147U4006F**	1
38f	Decal Side Stripes, red LH	Rear sill	MY17.5	**A147U4007F**	1
38g	Decal Side Stripes, red RH	Rear sill	MY17.5	**A147U4008F**	1
39	Decal 'ELISE SPRINT 220', black	On rear clamshell	MY17.5	**A147U0074F**	1

Function Code 12.05a Decals, Badges & Protective Film, Elise 2011 MY

Dep	Part Description	Remarks	Option	Part Number	Qty
39a	Decal 'ELISE SPRINT 220', aluminium	On rear clamshell	MY17.5	**A147U0075F**	1
39b	Decal 'ELISE SPRINT 220', orange	On rear clamshell	MY17.5	**A147U0076F**	1
39c	Decal 'ELISE SPRINT 220', red	On rear clamshell	MY17.5	**A147U0077F**	1
40	Decal 'EVO', black		EVO edition		3
40a	Decal 'EVO', orange		EVO edition		3
		* Refer to LSL587 for fitting instructions			

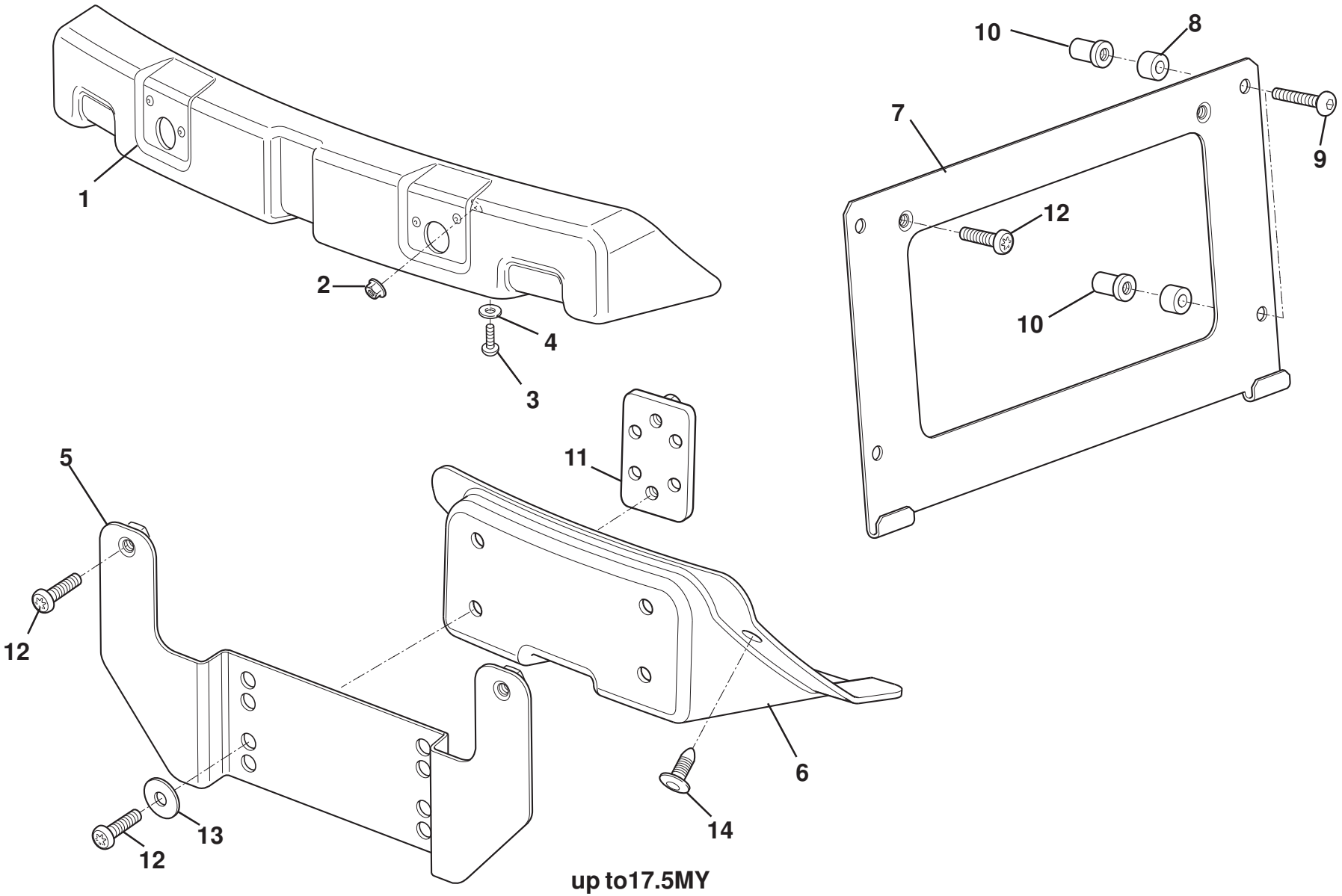

ELISE

12.07a page1

Updated 3rd April 2017

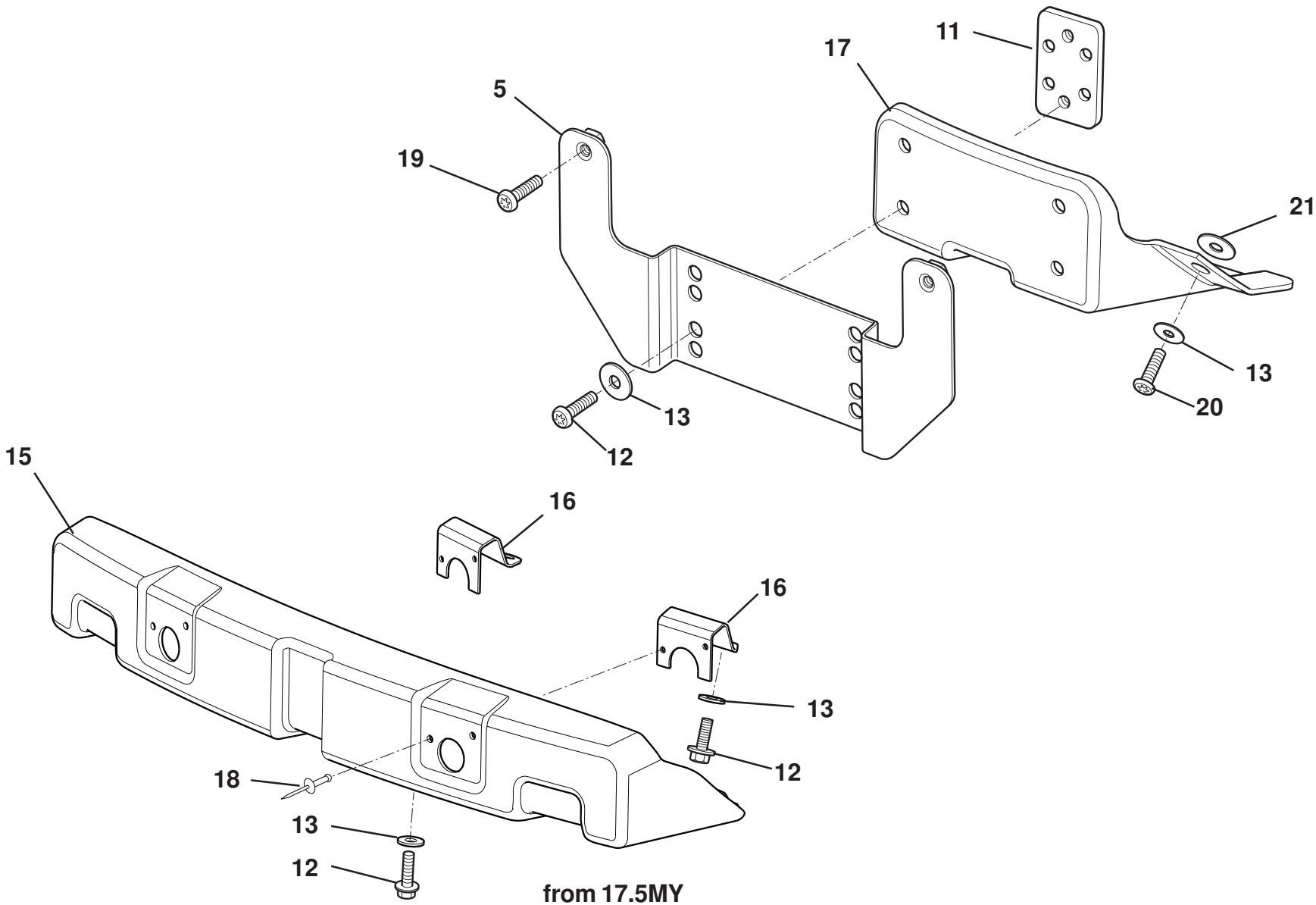

ELISE

12.07a page2

Updated 3rd April 2017

Function Code 12.07a Licence Plate Mountings, Elise 2011 MY

Dep	Part Description	Remarks	Option	Part Number	Qty
01	Plinth Assembly, front license plate mounting		Euro, Up to 17.5MY	**A120B0304J**	1
02	Nut, M6 flg, plinth to clamshell	5 off prior to vin BH_ 11418		**A117W3180F**	2
03	Screw, M6 x 16, hex hd. s/s black, plinth to clamshell		From vin BH_ 11418	**A126W1215F**	3
04	Washer, M6 x 18 x 1.6 s/s black, plinth to clamshell		From vin BH_ 11418	**A126W4213F**	3
05	Bracket licence plate frt		Japan/Taiwan from vin BH_ 11418	**A132U0467F**	1
05a	Bracket licence plate frt		USA	**A121U0170F**	1
06	Plinth Assembly, front license plate mounting		USA & Japan/Taiwan from vin BH_ 11418 Up to 17.5MY	**A121B0168K**	1
07	Carrier, rear number plate		Japan/Taiwan from BH_ vin 11418	**A132U0480F**	1
08	Spacer, nylon			**A117W6721F**	4
09	Screw M6 x 25 skt btn black s/s			**A116W7206F**	4
10	Jacknut M6			**A075W3031Z**	4
11	Nutplate number plate mounting		Japan/Taiwan from vin BH_ 11418	**A121B0119E**	2
12	Screw M6 x 16 btn cap black s/s			**A082W7105F**	13
13	Washer M6 x 15 x 1.5 s/s			**A082W4133F**	9
14	Button Firtree 6.35x19.50 black			**A132W6006F**	2
15	Plinth Assembly		From 17.5MY	**A147B0057F**	1

Function Code 12.07a Licence Plate Mountings, Elise 2011 MY

Dep	Part Description	Remarks	Option	Part Number	Qty
16	Bracket Plinth, front license plate mounting		From 17.5MY	**A147B0061G**	2
17	Plinth Assembly, japan		From 17.5MY	**A147B0055F**	1
18	Rivet			**A082W6512F**	4
19	Screw M6 x 16 torx pan hd			**A117W2213F**	2
20	Screw M6 x 20 skt btn hd blk			**A100W7096F**	3
21	Washer Neoprene			**A111U6055F**	2

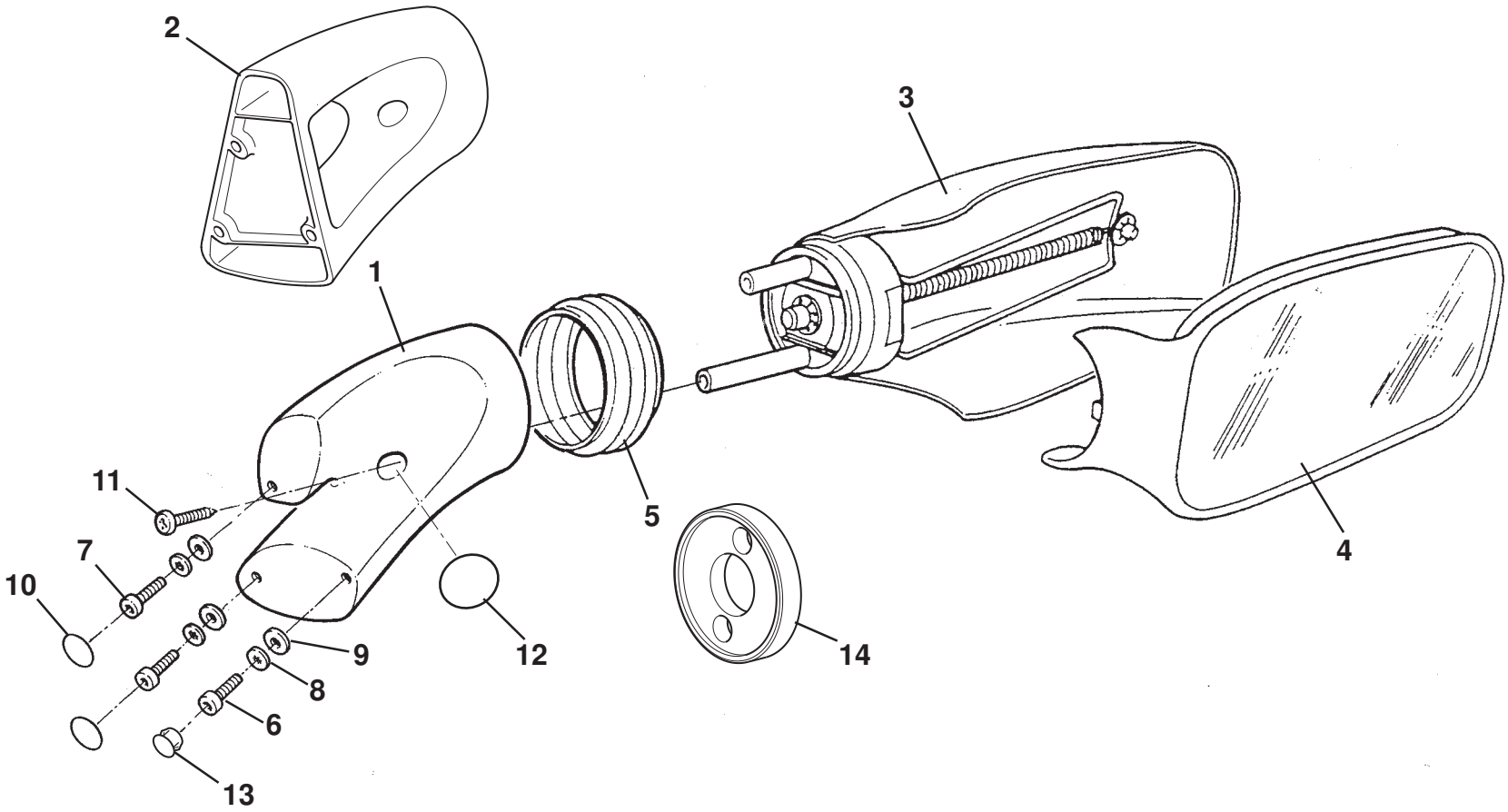

ELISE

12.09

Function Code 12.09 Exterior Driving Mirrors

Dep	Part Description	Remarks	Option	Part Number	Qty
01	Plinth, mirror mounting, RH, open ended mounting	Not painted	A117U0124F R/B	**B117U0124F**	1
01a	Plinth, mirror mounting, LH, open ended mounting	Not painted	A117U0123F R/B	**B117U0123F**	1
02	Plinth, mirror mounting, RH, triangular mounting	Not painted		**A120U4066F**	1
02a	Plinth, mirror mounting, LH, triangular mounting	Not painted		**A120U4065F**	1
03	Mirror Housing	Not painted	Common RH & LH	**B111U0117K**	2
04	Glass Assembly, convex	Except USA/Canada, RH	Common RH & LH	**A111U6046F**	2
04a	Glass Assembly, flat	Also Australia RH	Gulf States LH	**A111U6039F**	1
04b	Glass Assembly, convex, arabic text		Gulf States	**A121B0157F**	1
05	Bellows, mirror to plinth			**A111U6032F**	2
06	Screw, M5 x 20, cap hd., plinth to door		Rearward fixings	**A111W7126F**	2
07	Screw, M5 x 16, cap hd.		Forward fixings	**A117W7216F**	4
08	Washer, internal shakeproof, M5, plinth to door			**A075W4045Z**	6
09	Washer, flat, M5, plinth to door			**A075W4011Z**	6
10	Blanking Decal, 20mm, door holes covering			**A111V0206F**	4
11	Screw, Ejot, torx hd., plinth to mirror			**A117F6001F**	2
12	Blanking Decal, 26mm, plinth hole covering			**A116B0399F**	2
13	Blanking Plug, dia 9.5 black, door holes covering			**A124W6857F**	2
14	Spacer, door mirror			**A120B0339F**	2

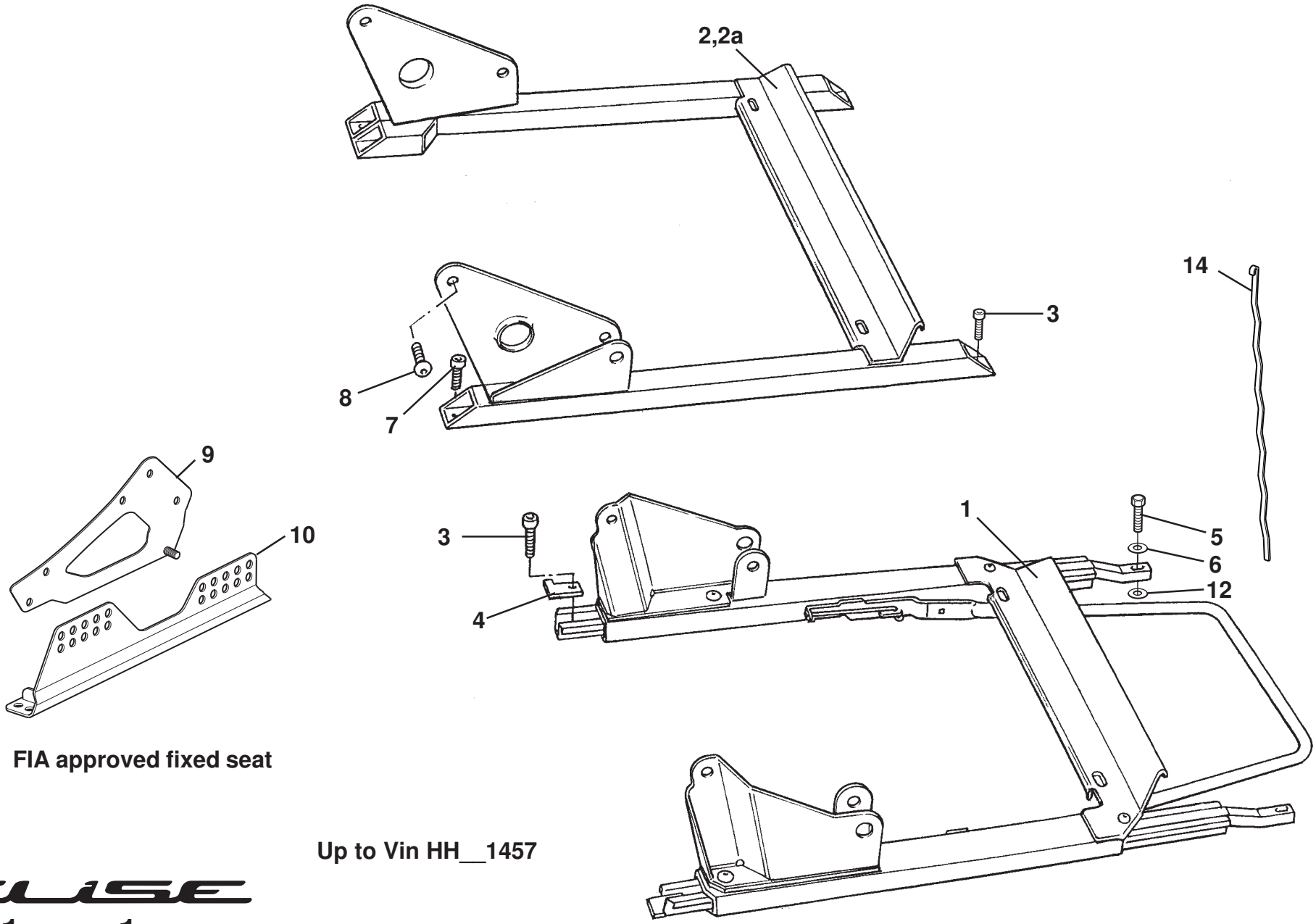

FIA approved fixed seat

Up to Vin HH__1457

ELISE

13.01 page 1

Updated 4th December2017

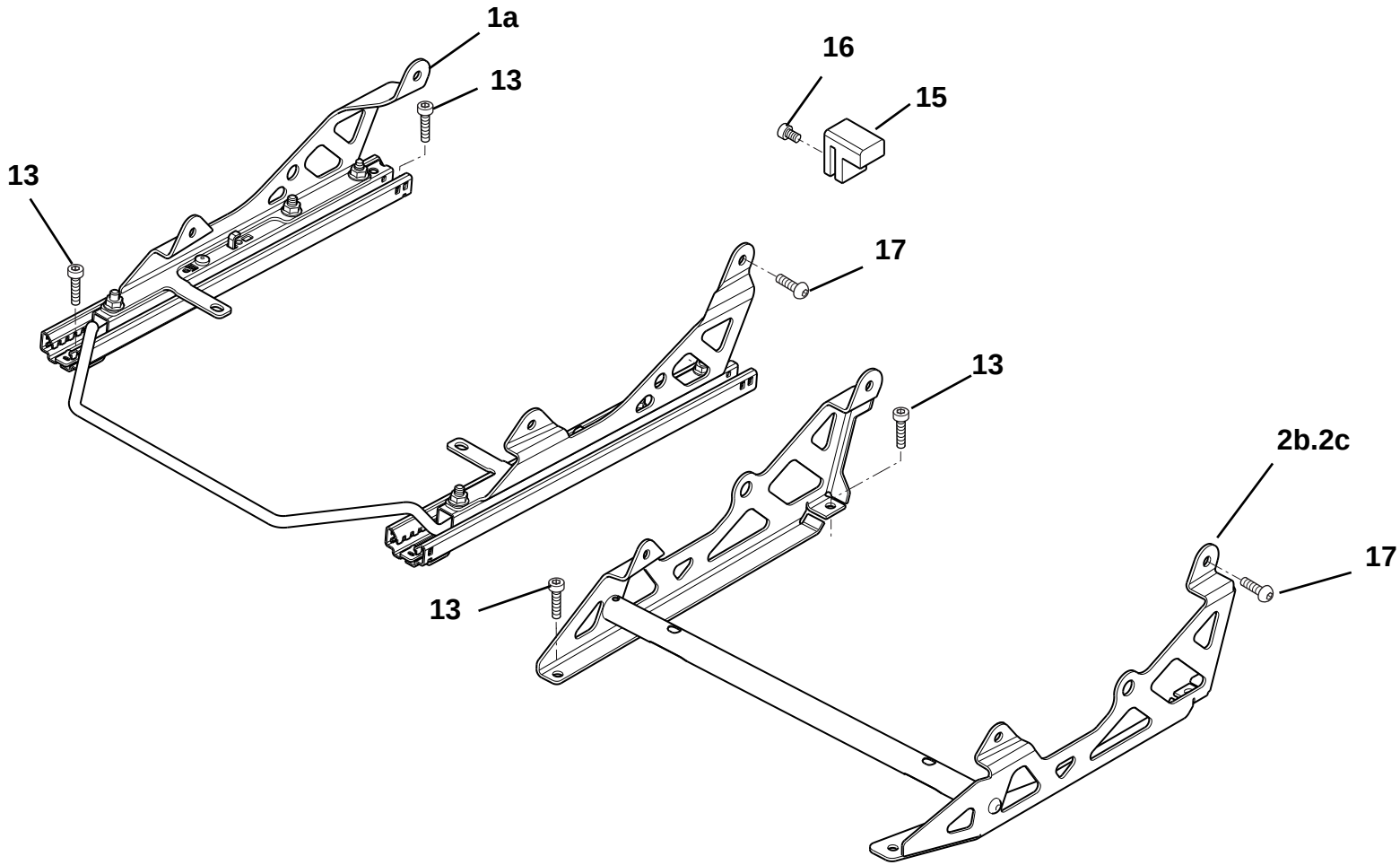

From Vin HH__1457

ELISE

13.01 page 2

Updated 2nd November 2018

Function Code 13.01 Seat Runners

Dep	Part Description	Remarks	Option	Part Number	Qty
01	Seat Runners, driver, RHD, LHD			**A120B0155S**	1
01a	Seat Runner Assembly, driver, RHD, LHD		Vin HH__1438 & from Vin HH__1457 on	**A147V0029J**	1
02	Seat Mounting Frame, passenger, RHD			**A120B0168F**	1
02a	Seat Mounting Frame, passenger, LHD			**A120B0169F**	1
02b	Seat Mounting Frame, passenger, RHD		Vin HH__1438 & from Vin HH__1457 on	**B147V4016J**	1
02c	Seat Mounting Frame, passenger, LHD		Vin HH__1438 & from Vin HH__1457 on	**B147V4015J**	1
03	Screw, M8 x 22, cap hd., runner rear/mtg. frame front fix.			**A120W5284F**	4
04	Stop, seat runner			**A138V0324F**	2
05	Screw, M8 x 25, hex. hd. black, runner front fix.			**B075W1039Z**	2
06	Washer, flat, M8 x 16.6 x 1.4, runner front fix.			**A075W4020Z**	2
07	Screw, M8 x 16, cap hd., mounting frame rear fix.			**A111W7125F**	2
08	Screw, M8 x 12, button hd., side brackets to seat			**A111W7131F**	4
09	Fixed Seat Mounting LH,FIA approved	Track only option		**A128U4013S**	1
09a	Fixed Seat Mounting RH, FIA approved	Track only option		**A128U4014S**	1
10	Seat Support Plate LH, FIA approved	Track only option		**A128B4107S**	1
10a	Seat Support Plate RH, FIA approved	Track only option		**A128B4108S**	1
11	Seat Mounting Bracket set, fixed seats, FIA approved	Track only option		**A128U0047S**	2

Function Code 13.01 Seat Runners

Dep	Part Description	Remarks	Option	Part Number	Qty
12	Washer, flat, M8 x 20.5 x 1.4, drivers seat runner			**A082W4165F**	3
13	Screw, M8 x 16, cap hd., mounting frame fix.			**A111W7125F**	8
14	Tensioner, seat runner			**A142V0001K**	2
15	Seat Runner Limit Stop	No longer fitted not required	Gulf States & A frame cars	**A138V0955K**	2
16	Screw M5 x 5 skt hd			**A132W1000F**	2
17	Screw, M8 x 25, button hd. Black			**A111W7115F**	8

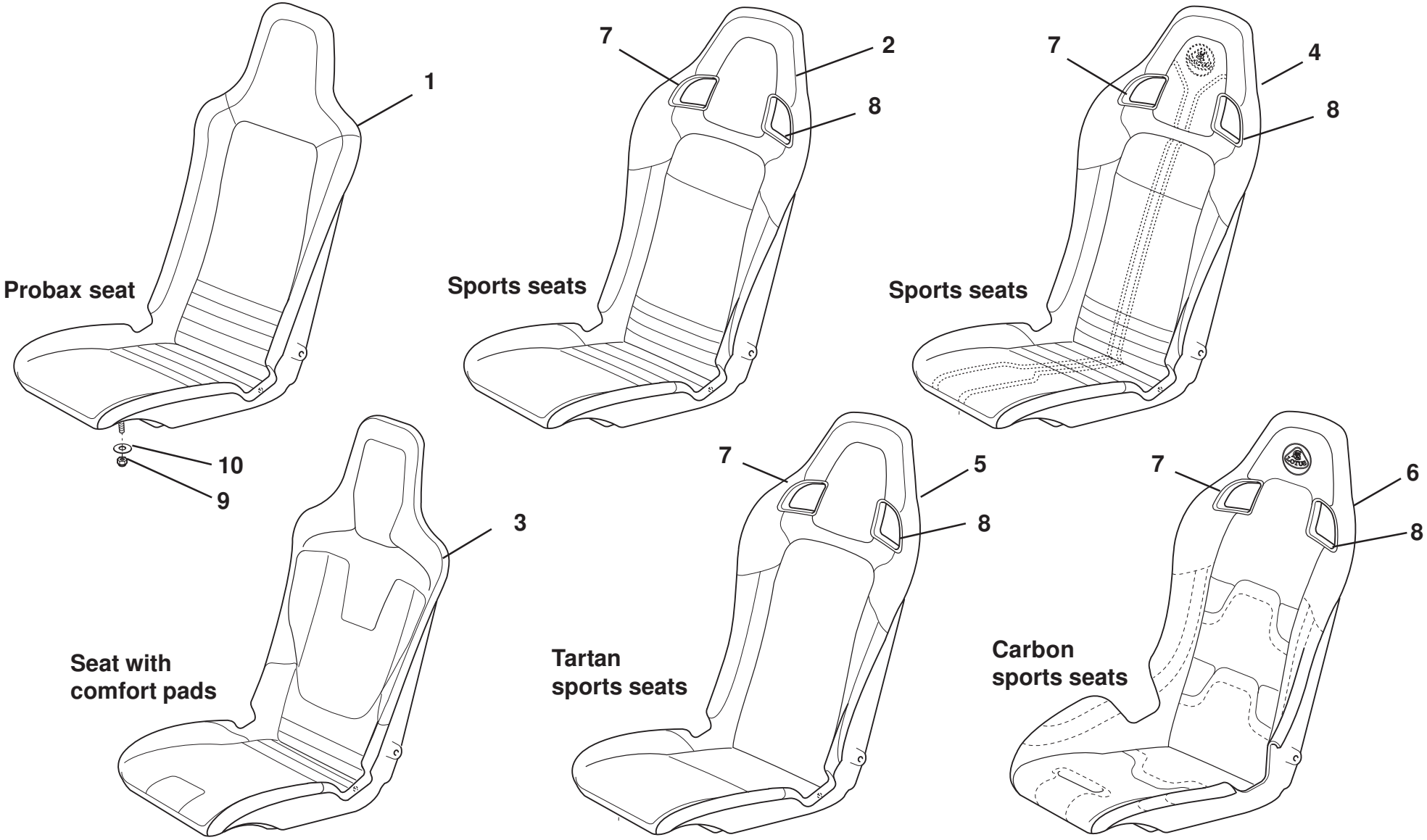

ELISE

13.02

Updated 2nd May 2017

Service Parts List ELISE

Function Code 13.02 Seat Assemblies, front

Dep	Part Description	Remarks	Option	Part Number	Qty
01	Seat Assembly, probax, common		black cloth	**A120V0285S**	2
01a	Seat Assembly, probax, common		black leather	**A120V0287S**	2
01b	Seat Assembly*	Lotus logo	'MY12', cloth	**A120V0524S**	2
01c	Seat Assembly*	Lotus logo	'MY12', leather	**A120V0525S**	2
02	Sports Seat*	Lotus logo	'MY12' cloth	**A120V0518S**	2
02a	Sports Seat*	Lotus logo	'MY12' leather	**A120V0508S**	2
03	Seat, shell, body coloured, CR logo on shell*	Exposed with comfort pads, provide seat shell colour when ordering	Elise Club Racer '10 MY'	**A120V0354S**	2
03a	Seat, shell body coloured lotus roundal on headrest*	Exposed with comfort pads, provide seat shell colour when ordering	Elise Club Racer '11MY', Exige Club Racer '12MY'	**A120V0597S**	2
03b	Seat, shell body coloured S logo on headrest*	Exposed with comfort pads, provide seat shell colour when ordering	Elise S Club Racer	**A120V0598S**	2
04	Sports Seat*	State colour of seat hoops when ordering	'MY16'.5, leather	**A138V0456S**	2
04j	Sports Seat*	State colour of seat hoops when ordering	Alcantara, Elise sport	**A120V0620S**	2
05	Sports Seat*	State colour of seat hoops when ordering	Tartan, Elise sport	**A120V0622S**	2
06	Assembly Seat ,carbon*	State colour of seat hoops when ordering	'MY17.5' alcantara		2

Function Code 13.02 Seat Assemblies, front

Dep	Part Description	Remarks	Option	Part Number	Qty
06a	Sports Seat, carbon*	State colour of seat hoops when ordering	'MY17.5' tartan, Elise sport		2
06b	Assembly Seat ,carbon, 'sprint logo'*	State colour of seat hoops when ordering	'MY17.5' alcantara		2
07	Bezel, seat belt aperture, front, RH			**A122U0046K**	2
07a	Bezel, seat belt aperture, rear, RH			**A122U0050K**	2
08	Bezel, seat belt aperture, front, LH			**A122U0049K**	2
08a	Bezel, seat belt aperture, rear, LH			**A122U0045K**	2
09	Nyloc Nut, M8, seat to runner/frame			**A075W3010Z**	8
10	Washer flat, M8 x 17 x 1.6, seat to runner/frame			**A075W4020Z**	8
		*Use Trim Order Form LSL654			

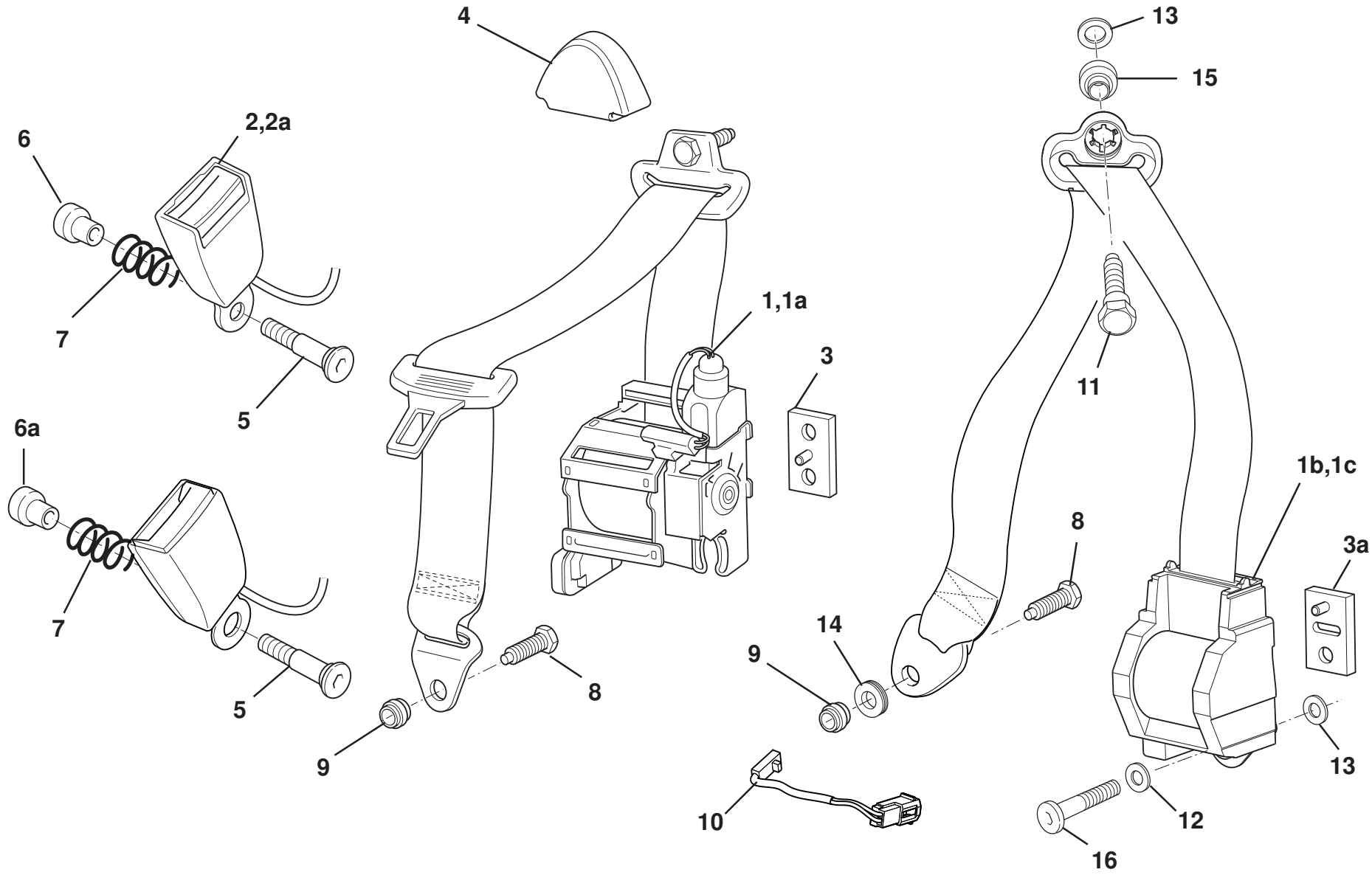

ELISE

13.27

Updated 2nd January 2018

Function Code 13.27 Seat Belts, front

Dep	Part Description	Remarks	Option	Part Number	Qty
01	Seat Belt Assembly, retractor, airbag, driver			**B121B0013F**	1
01a	Seat Belt Assembly, retractor, airbag, passenger			**B121B0014F**	1
01b	Seat Belt Assembly, retractor		Vin HH__1438 & from Vin HH__1457 on	**A138U0056F**	2
02	Buckle, seat belt, switched	With lead and connector	Japan + airbag driver	**A120B0025F**	2
02a	Buckle, seat belt			**A120B0026F**	2
02b	Buckle, seat belt, switched	With lead and connector	Vin HH__1438 & from Vin HH__1457 on	**A138U0058F**	1
02c	Buckle, seat belt,unswitched		Vin HH__1438 & from Vin HH__1457 on	**A138U0059F**	1
03	Spacer Block, belt to bracket			**A121U0008F**	2
03a	Spacer Block, belt to bracket		Vin HH__1438 & from Vin HH__1457 on	**A138U0057F**	2
04	Cover Assembly, upper anchorage			**A116U6007S**	2
05	Bolt, 7/16" UNF, csk., skt., hd., seat belt buckle		Vin HH__1438 & from Vin HH__1457 on	**B121W2209F**	2
06	Spacer, stepped, seat belt buckle			**A121B0045F**	2
06a	Spacer, stepped, seat belt buckle		Vin HH__1438 & from Vin HH__1457 on	**B147V0044F**	2
07	Spring, seat belt buckle			**A111U6016F**	2
08	Bolt, shoulder, 7/16", seat belt fixing			**B121W2210F**	2

Function Code 13.27 Seat Belts, front

Dep	Part Description	Remarks	Option	Part Number	Qty
09	Spacer, 19.0 dia. x 12.5mm, seat belt fixing			**A121W6782F**	2
10	Jumper Harness		Vin HH__1450 & from Vin HH__1456 on	**A138M0190F**	2
11	Bolt, Seat Belt, T50 torx		Vin HH__1450 & from Vin HH__1456 on	**A120V6050S**	2
12	Lock Washer, seat belt		Vin HH__1450 & from Vin HH__1456 on	**A120V6051S**	2
13	Keep Washer, seat belt		Vin HH__1450 & from Vin HH__1456 on	**A120V6052S**	4
14	Insert, seat belt		Vin HH__1450 & from Vin HH__1456 on	**A120V6053S**	2
15	Spacer, seat belt		Vin HH__1450 & from Vin HH__1456 on	**A120V6054S**	2
16	Shoulder Bolt, Seat Belt,		Vin HH__1450 & from Vin HH__1456 on	**A120V6055S**	2

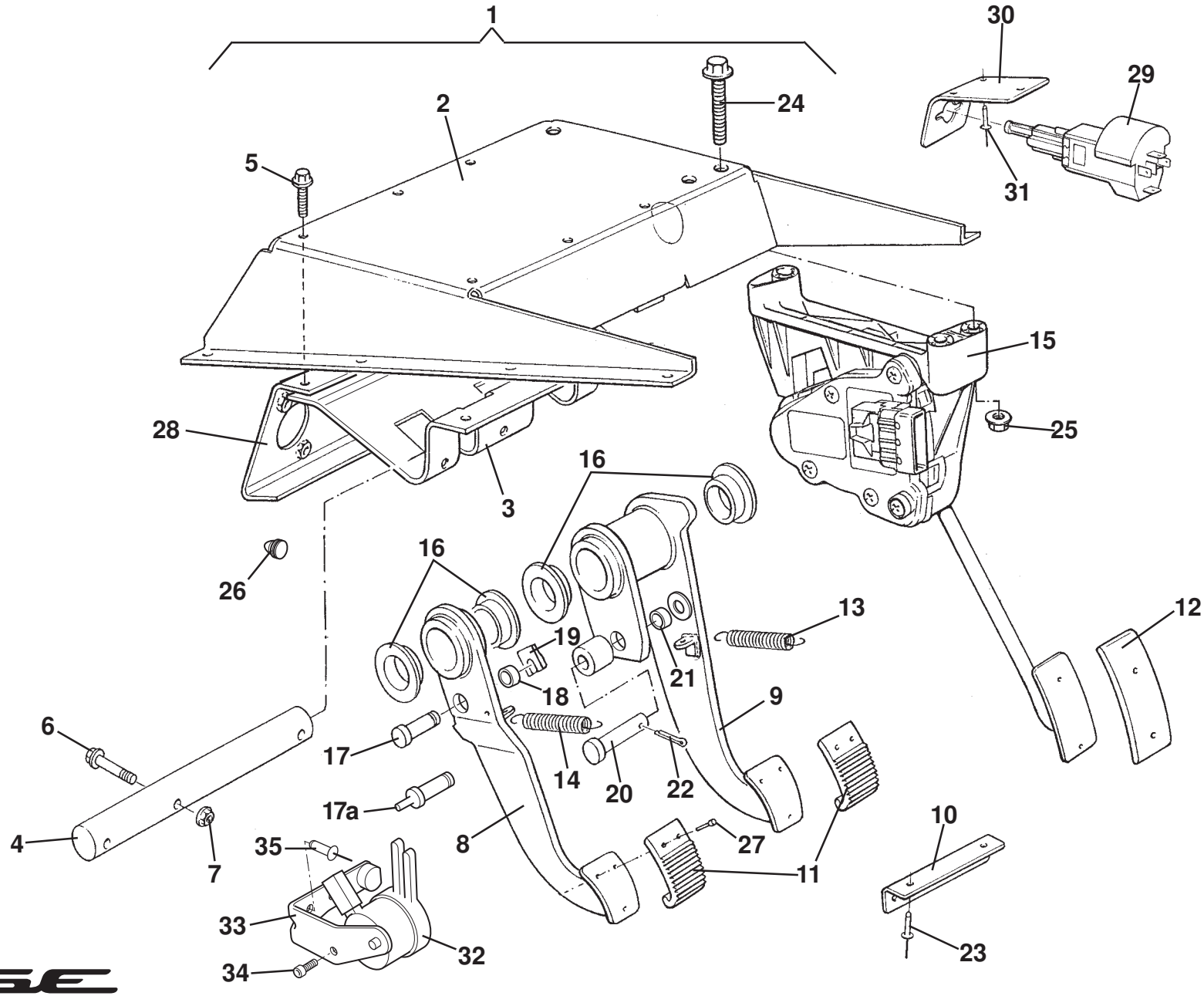
1
2
3
4
5
6
7
8
9
10
11
12
13
14
15
16
16
16
17
17a
18
19
20
21
22
23
24
25
26
27
28
29
30
31
32
33
34
35

ELISE

14.01a

Function Code 14.01a Pedal Box, Pedals, Electronic Throttle Control

Dep	Part Description	Remarks	Option	Part Number	Qty
01	Pedal Box Assembly, RHD	Incl. servo/master cyl.		**A120J0068J**	1
01a	Pedal Box Assembly, LHD	Incl. servo/master cyl.		**A120J0069J**	1
02	Pedal Box			**A116J0066H**	1
03	Pedal shaft Support			**A116J0042H**	1
04	Shaft, pedal pivot			**A116J0043H**	1
05	Screw, M5 x 16, flg. hd.			**A132J6025H**	5
06	Bolt, M5 x 30 flg. hd.			**A120J6017H**	3
07	Flange Nut, M5			**A130W3007H**	3
08	Clutch Pedal	Does not include item 18		**A120Q0006H**	1
09	Brake Pedal			**A120J0015H**	1
10	Bracket, return springs to chassis			**D116Q0014F**	1
11	Pedal Pad, alloy, brake & clutch			**A120J0014H**	2
12	Pedal Pad, alloy, throttle			**A120J0013H**	1
13	Spring, brake pedal return			**A120J6006F**	1
14	Spring, clutch pedal return			**A120J6006F**	1
15	Electronic Throttle Assembly			**A116J0003L**	1
16	Bearing, pedal pivots			**A111J6018F**	5
17	Clevis Pin, clutch pedal to pushrod, with integral pin	For cruise control		**A120Q0008H**	1
18	Clevis Pin Bearing, pin to clutch pedal			**A116Q6004H**	1
19	Clip, clevis pin retention			**A116Q6006H**	1
20	Clevis Pin, brake pedal to pushrod			**A116J6023H**	1

Function Code 14.01a Pedal Box, Pedals, Electronic Throttle Control

Dep	Part Description	Remarks	Option	Part Number	Qty
21	Spacer, pin to brake pedal			**A116J6022H**	1
22	Split Pin, clevis pin retention			**A116J6024H**	1
23	Pop Rivet, return spring bracket to chassis			**A075W6068Z**	2
24	Screw, M8 x 40, flg. hd.			**A130W2034H**	3
25	Flange Nut, M8			**A130W3009H**	3
26	Rubber Buffer, pedal box			**A120J6009S**	2
27	Rivet, pedal pads			**A075W6094Z**	6
28	Brake TMC Plate			**A116J0041H**	1
29	Brake Light Switch			**A116J6034F**	1
30	Bracket, switch to chassis			**A120J0119F**	1
31	Pop Rivet, return spring bracket to chassis			**A075W6068Z**	2
32	Potentiometer, clutch	For cruise control		**A132J0107H**	1
33	Bracket/Stop Assembly, potentiometer mounting	For cruise control		**A120Q0012F**	1
34	Screw, M4 x 10, cap hd., potentiometer to bracket	For cruise control		**A126W5320F**	1
35	Pop Rivet, bracket to pedal box	For cruise control		**A132W6024F**	2

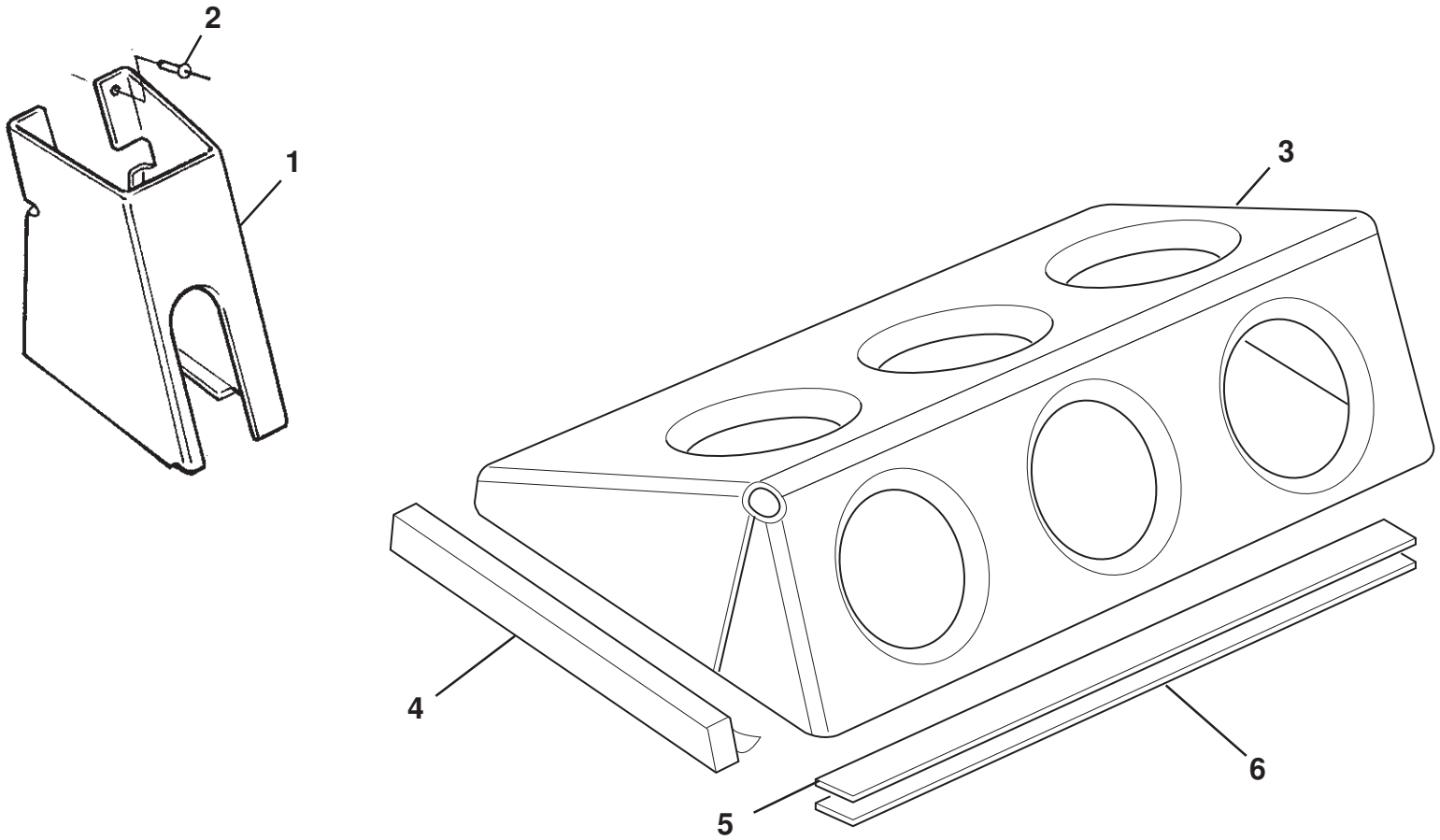

ELISE

14.03

Function Code 14.03 Footrests

Dep	Part Description	Remarks	Option	Part Number	Qty
01	Driver Footrest, RHD			**C120U0007F**	1
01a	Driver Footrest, LHD			**A111A0104F**	1
02	Pop Rivet, footrest RHD to chassis			**A111W6613F**	4
03	Passenger Footrest RHD			**A120U0008F**	1
03a	Passenger Footrest Assembly, LHD			**B111A0102J**	1
03b	Passenger Double Footrest Assembly, LHD			**A117U0075F**	1
03c	Passenger Double Footrest Assembly, RHD			**A117U0076F**	1
04	Foam Seal, 25 x 12.5			**A082U6065V**	1.0M
05	Grip-Lok, self adhesive, hook			**A111V6020V**	1.0M
06	Grip-Lok, self adhesive, loop			**A111V6019V**	1.0M

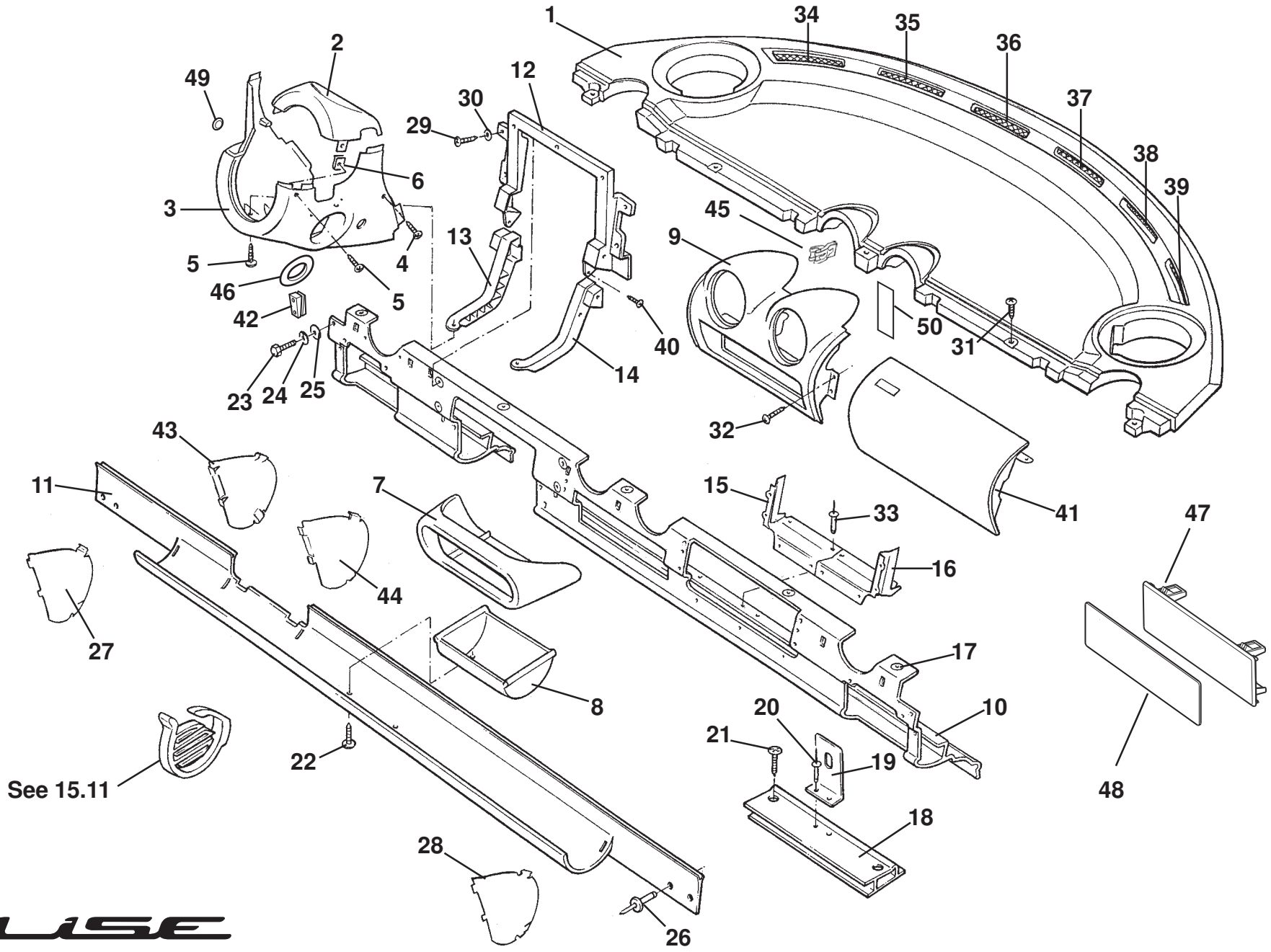

ELISE

14.05b

Updated 4th September2017

Function Code 14.05b Fascia Structure & Supporting Hardware, Twin Airbag

Dep	Part Description	Remarks	Option	Part Number	Qty
01	Fascia Top Panel			**B121U0017F**	1
02	Column Cowl, upper, senosoft charcoal			**A121U0173F**	1
02a	Column Cowl, upper, senosoft, black		12 MY From Vin**	**C121U0173F**	1
03	Column Cowl, lower, senosoft, charcoal			**A121U0172F**	1
03a	Column Cowl, lower,senosoft, black		12 MY From Vin**	**A138V0099F**	1
04	Screw, self tap., No. 8 x 3/4", lower cowl to bracket			**A075W5074Z**	2
05	Screw, self tap., No. 6 x 0.5", lower to upper cowl			**A075W5020Z**	4
06	Spirenut, No. 8, lower to upper cowl			**A075W6016Z**	2
07	Panel, heater control mounting, senosoft, charcoal			**A120U0117F**	1
07a	Panel, heater control mounting, microfibre*		Microfibre	**A138V0754JM**	1
07b	Panel, heater control mounting, leather	Black stitching	Black leather	**A121V0016S**	1
07c	Panel, heater control mounting, leather*		Leather	**A138V0754JL**	1
07d	Panel, heater control mounting, senosoft, black		12 MY From Vin**	**A138V0221F**	1
07e	Panel, heater control mounting, carbon			**A138V0901F**	1
07f	Panel, heater control mounting		Unpainted	**C121U0032F**	
08	Support, heater control panel mounting			**A121U0071F**	1
08a	Panel, heater control mounting, senosoft, charcoal		Optional	**A120U0156K**	1
09	Mounting Assembly, centre FLV, senosoft, charcoal			**A121U0182F**	1

Function Code 14.05b Fascia Structure & Supporting Hardware, Twin Airbag

Dep	Part Description	Remarks	Option	Part Number	Qty
09a	Mounting Assembly, centre FLV, senosoft, black		12 MY From Vin**	**A138V0113F**	1
09b	Mounting Assembly, centre FLV, alcantara*		17.5 MY, alcantara	**A138V0733JA**	1
09d	Mounting Assembly, centre FLV, carbon		17.5 MY	**A138V0900F**	1
10	Dash Panel Upper, LHD			**E121U0041F**	1
10a	Dash Panel Upper, RHD		Euro option	**D121U0042F**	1
11	Dash Panel Lower/Stowage Shelf, LHD			**B121U0115F**	1
11a	Dash Panel Lower/Stowage Shelf, RHD		Euro option	**B121U0116F**	1
12	Bracket, instrument pack mounting			**C121U0101F**	1
13	Mounting Bracket, column shroud, LH			**B121U0087F**	1
14	Mounting Bracket, column shroud, RH			**A121U0088F**	1
15	Chute, PAB aperture, LH			**B121U0141K**	1
16	Chute, PAB aperture, RH			**B121U0142K**	1
17	Captive Plastic Nut			**A120W3186F**	16
18	Radio Support Extrusion			**A121U0081F**	1
19	Bracket, radio support, rear			**B121U00100F**	1
20	Pop Rivet, bracket to extrusion			**A100W6397F**	2
21	Screw, No. 10 x 1/2", extrusion to chassis			**A075W5040Z**	2
22	Screw, No. 10 x 1/2", support to panel			**A075W5040Z**	2
23	Screw, M6 x 25, hex. hd., dash panel upper to body			**A075W1031F**	4
24	Washer, spring, M6, dash panel upper to body			**A075W4035Z**	4
25	Washer, flat, M6 x 12.1 x 1.4, dash panel upper to body			**A075W4013F**	4

Function Code 14.05b Fascia Structure & Supporting Hardware, Twin Airbag

Dep	Part Description	Remarks	Option	Part Number	Qty
26	Pop Rivet, dash panel lower to chassis			**A085W6259F**	4
27	Closing Panel, stowage shelf, LH			**A121U0051F**	1
28	Closing Panel, stowage shelf, RH			**A121U0052F**	1
29	Screw, self tap., No. 8 x 3/4", bracket fixing			**A075W5074Z**	4
30	Washer, M6 x 12.1 x 1.4, bracket fixing			**A075W4013F**	4
31	Screw, self tap., No. 8 x 3/4", top panel fixing			**A075W5074Z**	4
32	Screw, self tap., No. 8 x 3/4", mount FLV fixing			**A075W5074Z**	3
33	Pop Rivet, domed, black, chute to panel			**A082W6512F**	12
34	Grille, demist, LH outer			**A121U0125H**	1
35	Grille, demist, LH inner			**A121U0127H**	1
36	Grille, demist, LH centre			**A121U0129H**	1
37	Grille, demist, RH centre			**A121U0130H**	1
38	Grille, demist, RH inner			**A121U0128H**	1
39	Grille, demist, RH outer			**A121U0126H**	1
40	Screw, self tap., No. 8 x 3/4", shroud brackets fixing			**A075W5074Z**	2
41	Cover Assembly, passenger airbag, senosoft, charcoal	Also see 17.06b		**A121U0176F**	1
41a	Cover Assembly, passenger airbag, senosoft, black	Also see 17.06b	12 MY From Vin**	**A138V0151F**	1
41b	Cover Assembly, passenger airbag, suedetex	Also see 17.06b	Club Racer '11MY, S Clubracer	**A120V0594S**	1
42	Insert, dash panel to body, LH			**A121U0103F**	1
42a	Insert, dash panel to body, RH			**A121U0104F**	1

Function Code 14.05b Fascia Structure & Supporting Hardware, Twin Airbag

Dep	Part Description	Remarks	Option	Part Number	Qty
43	Closing Panel, column cowl, senosoft, charcoal, LH			**A121U0174F**	1
44a	Closing Panel, column cowl, senosoft, charcoal, RH			**A121U0175F**	1
45	Clip, FLV centre panel retention			**A121U0156S**	1
46	Grommet, ignition barrell to column shrouds			**B100V6061F**	1
47	Radio Blanking Plate	Painted black		**A120V0588K**	1
47a	Radio Blanking Plate			**A100V6070F**	1
47b	Radio Blanking Plate Mounting		16MY	**A120V0625K**	1
48	Aluminium Radio Blanking Plate Cover 'Elise'		16MY	**A120V0617F**	1
49	Plug, dome black, column cowl lower		12 MY From Vin**	**A138W6008F**	1
50	Radio Blanking Panel Support	Bonded to item 09		**A138V0935F**	2
		*Use Trim Order Form LSL654			
		**12 MY from approx vin CH_10646			

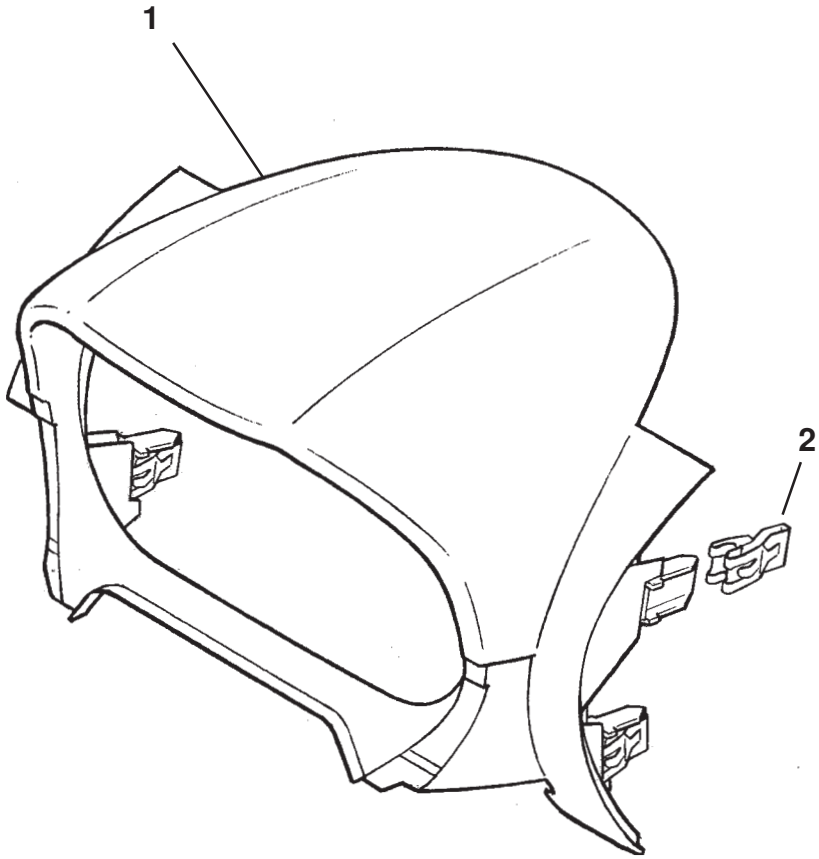
1
2

Function Code 14.10 Instrument Cowling/Binnacle

Dep	Part Description	Remarks	Option	Part Number	Qty
01	Instrument Cowling, airbag, senosoft, charcoal		'08 MY to Vin**	**A121U0181F**	1
01a	Instrument Cowling, airbag, microfibre*	A120V0362S R/B	Microfibre	**A138V0101HM**	1
01c	Instrument Cowling, airbag, leather*	A120V0363S R/B	Leather	**A138V0101HL**	1
01d	Instrument Cowling, airbag, leather	Black stitching	Black leather	**A138V0512F**	1
01e	Instrument Cowling, senosoft, black		Elise 12 MY From Vin**	**A138V0217F**	1
01f	Instrument Cowling, airbag, leather	Beige stitching	Black leather	**A120V0446S**	1
02	Clip, cowling retention			**A121U0156S**	4
		*Use Trim Order Form LSL654			
		**12 MY from approx vin CH_10646			

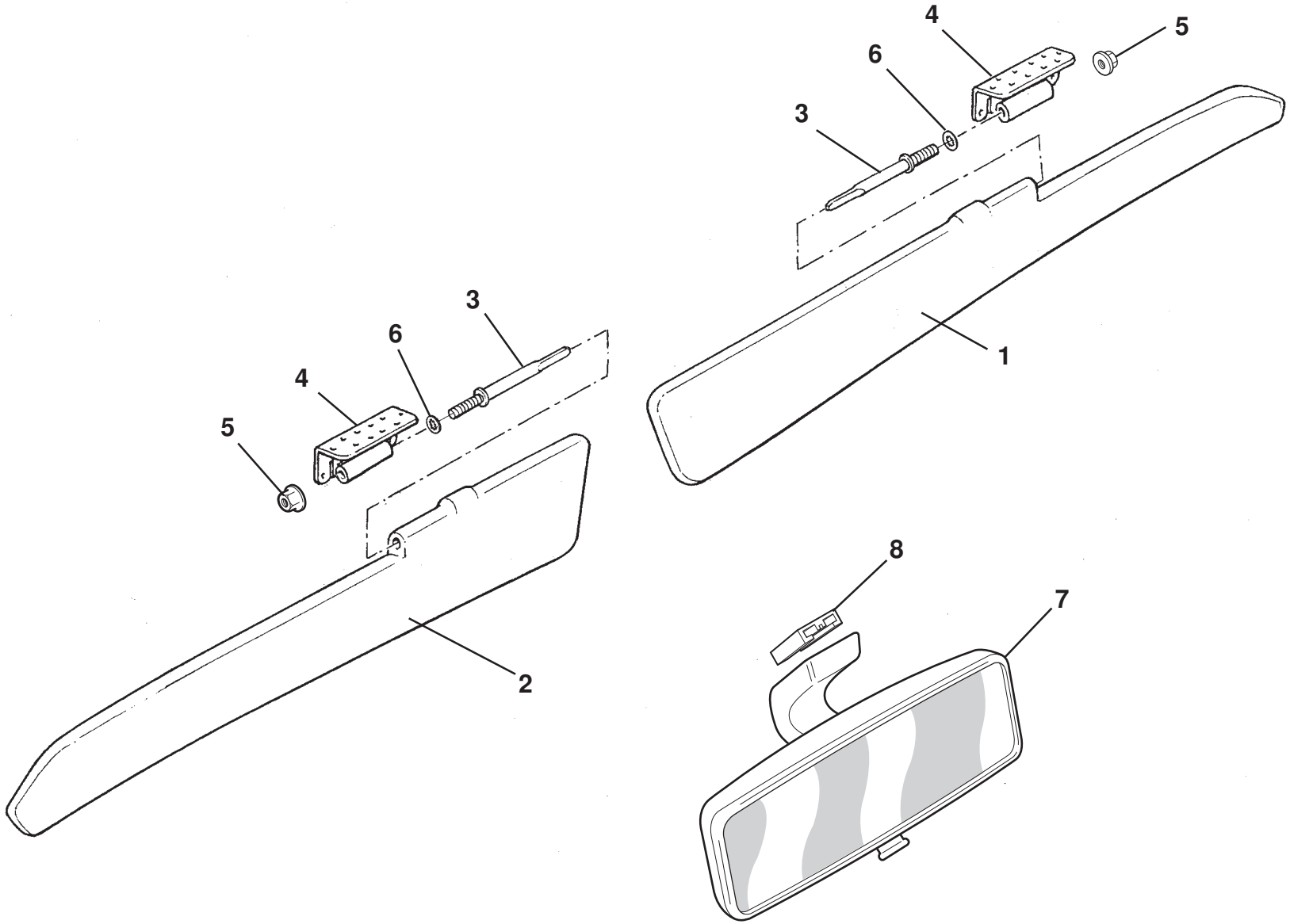

ELISE

15.05

Function Code 15.05 Interior Driving Mirror & Sunvisors

Dep	Part Description	Remarks	Option	Part Number	Qty
01	Sun Visor, driver, RHD			**C117V0710J**	1
01a	Sun Visor, driver, LHD			**C117V0711J**	1
02	Sun Visor, passenger, RHD			**C117V0712J**	1
02a	Sun Visor, passenger, LHD			**C117V0713J**	1
03	Pivot Pin, M8, sun visor			**A117U0468F**	2
04	Bracket, visor to header rail			**B117U0419F**	2
05	Nut, M8, Kaylock, visor to bracket			**A100C6022F**	2
06	Washer, M8, shakeproof, pin to bracket			**A075W4048Z**	2
07	Mirror, interior rear view, 22 cm wide			**A120U6009F**	1
08	Mounting Plinth, interior mirror			**A120U6010F**	1
09	Adhesive Kit, mirror mounting plinth	Not illustrated		**A116U0194F**	1
10	Betaclean 3900, glass preparation	Not illustrated		**A100B6008V**	1

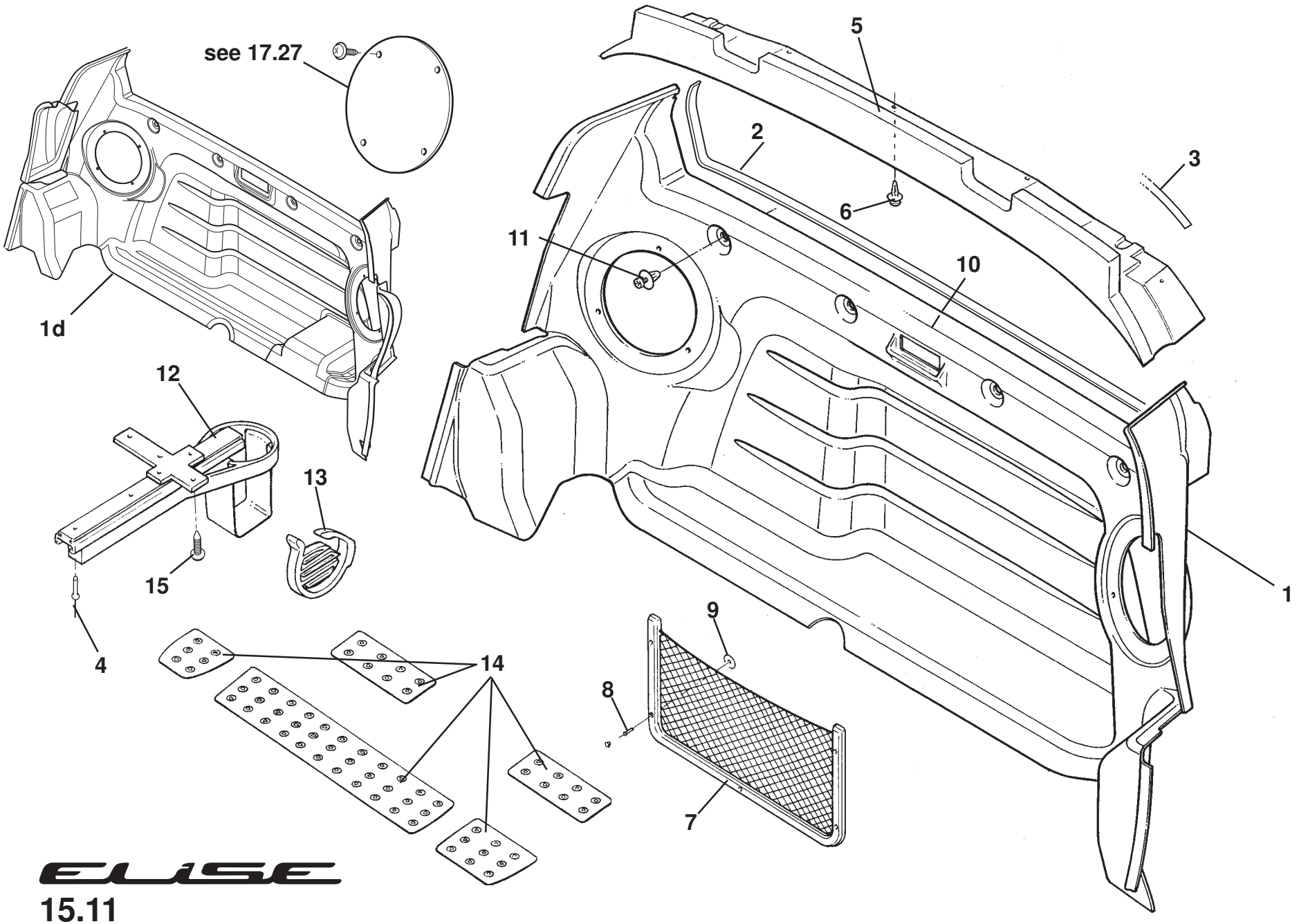

ELISE

15.11

Updated 5th February 2018

Function Code 15.11 Interior Trim & Stowage Provision

Dep	Part Description	Remarks	Option	Part Number	Qty
01	Rear Bulkhead Trim Panel, speakers			**D120U0011K**	1
01a	Rear Bulkhead Trim Panel, speakers		Bosch, ABS from vin BH_10931	**A120B0384F**	1
01b	Rear Bulkhead Trim Panel, secondary A/C unit		Gulf States	**A120U0127J**	1
01c	Rear Bulkhead Trim Panel (black brushed nylon)			**A120V0364S**	1
01d	Rear Bulkhead Trim Panel, speakers	For use with thinner SBAF		**B120V0602F**	1
01e	Rear Bulkhead Trim Panel, no speakers			**A138V0840F**	1
02	Edge Finisher			**A111U6034V**	1.1m
03	Anti Squeak Tape			**A132V6050V**	1.8m
04	Pop Rivet, cup holder to chassis		Optional	**A075W6068Z**	1
05	Trim Panel, rear header rail			**B121U0111F**	1
06	Plastic Fastener, trim panel fixing			**A100W6481F**	5
07	Stowage Net Assembly	Includes finisher plugs		**A117U6011F**	1
08	Pop Rivet, net to panel			**A082W6512F**	5
09	Washer, flat, 1/8" x 0.75", net to panel			**A075W4001Z**	5
10	Reinforcing Panel, panel rear			**A117U0164F**	1
11	Plastic Fastener, trim panel fixing			**A100W6391F**	6
12	Cup Holder Assembly		Optional	**A120U0065J**	1
13	Divider, stowage tray		Optional	**A120U0060F**	2

Function Code 15.11 Interior Trim & Stowage Provision

Dep	Part Description	Remarks	Option	Part Number	Qty
14	Stowage Tray Mat Set, RHD,lotus logo		Optional	**A120V0240F**	1
14a	Stowage Tray Mat Set, LHD,lotus logo		Optional	**A120V0241F**	1
14b	Stowage Tray Mat Set, LHD, no logo	Can be reversed to use for RHD		**A120V0541F**	1
15	Screw, M4 x 12, pan pozi., cup holder to chassis		Optional	**A075W5132F**	2

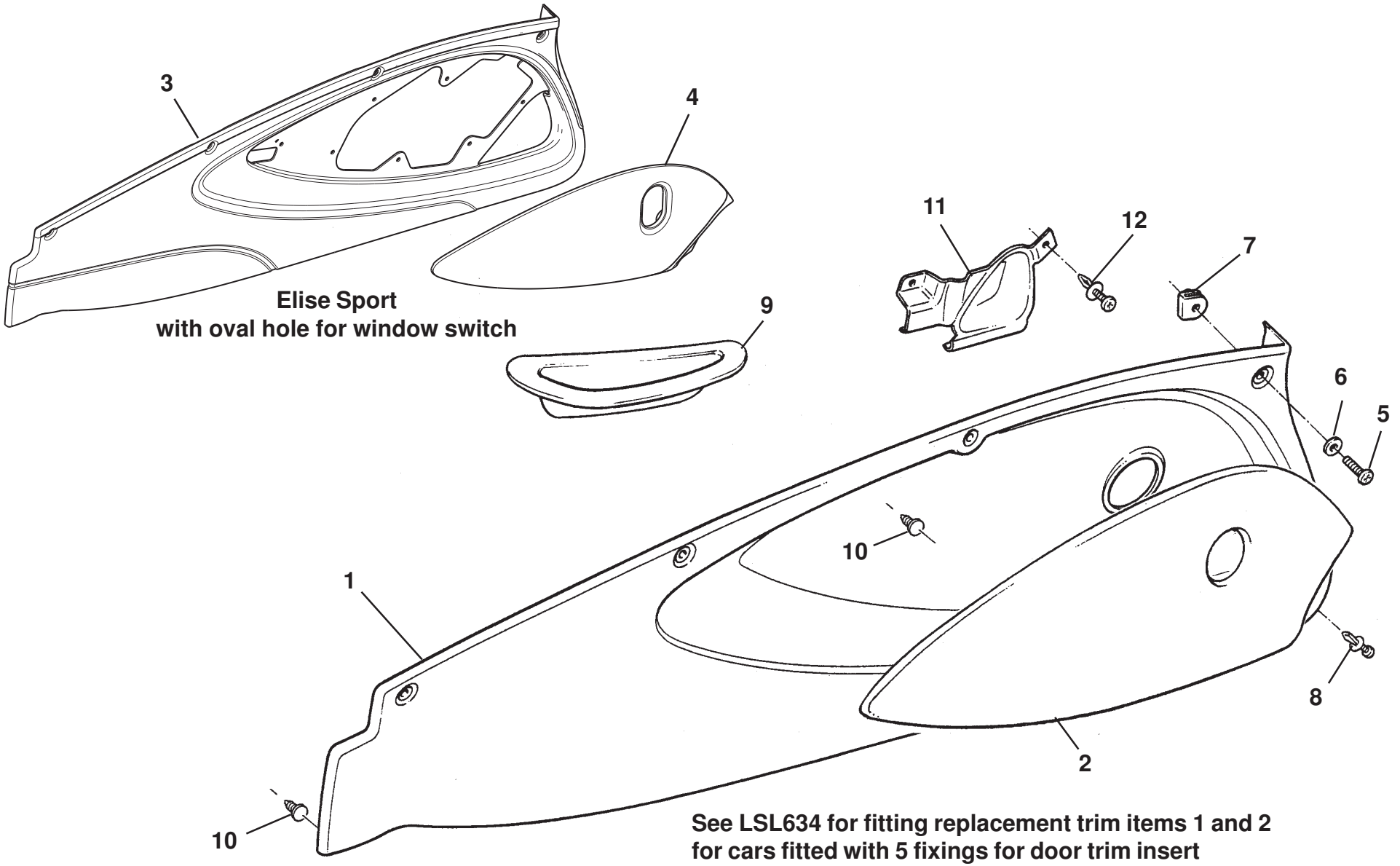

See LSL634 for fitting replacement trim items 1 and 2
for cars fitted with 5 fixings for door trim insert

Modifications to door trim to retro fit 5 and 7 fixing door trim inserts
all replacement door and insert trims supplied are for 7 fixings

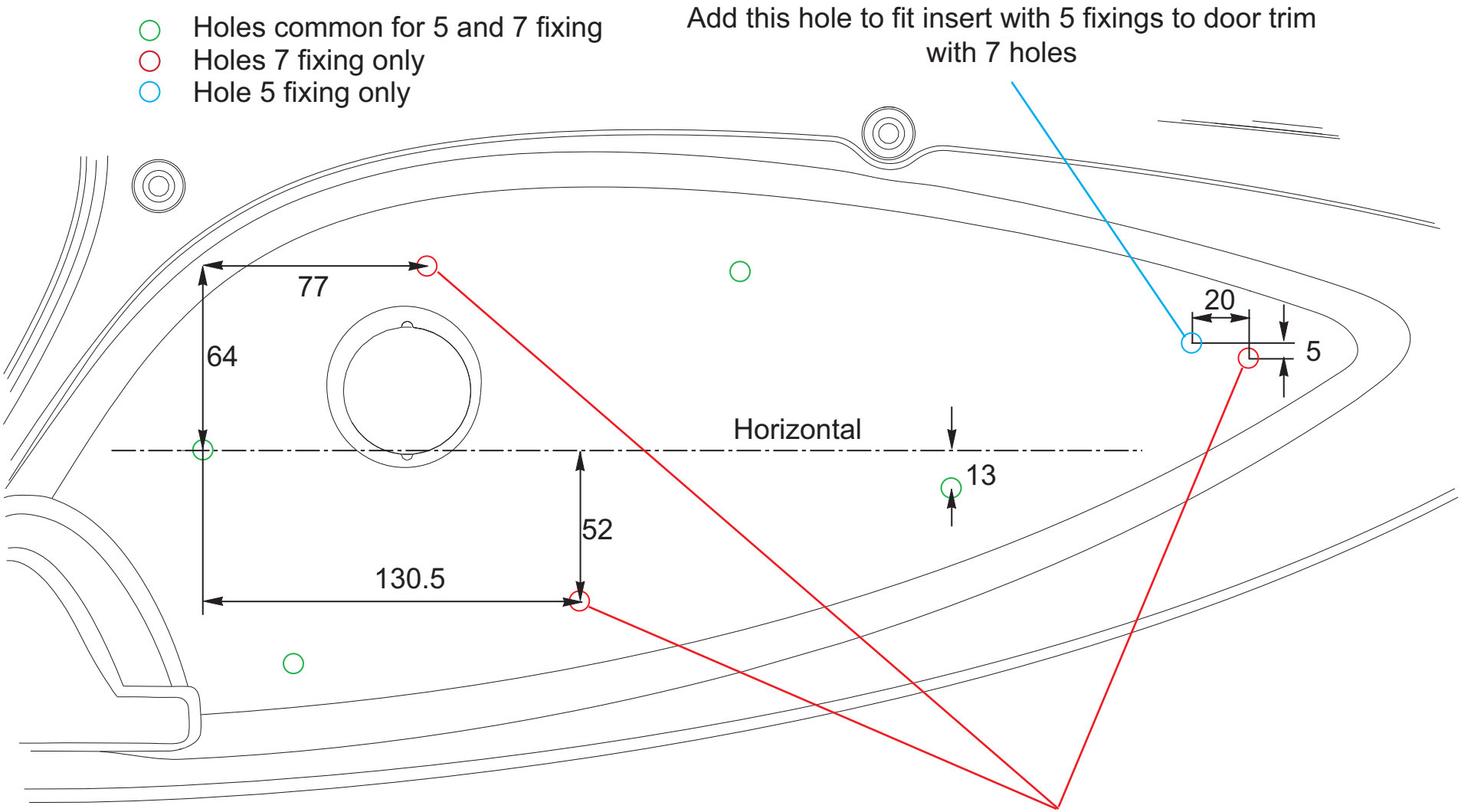

All dimensions in millimetres

LSL634

Modifications to door with single firtree fixing for the door trim panel to retro fit door trim with extra firtree fixings all replacement door trim panels supplied are with 4 firtree fixings

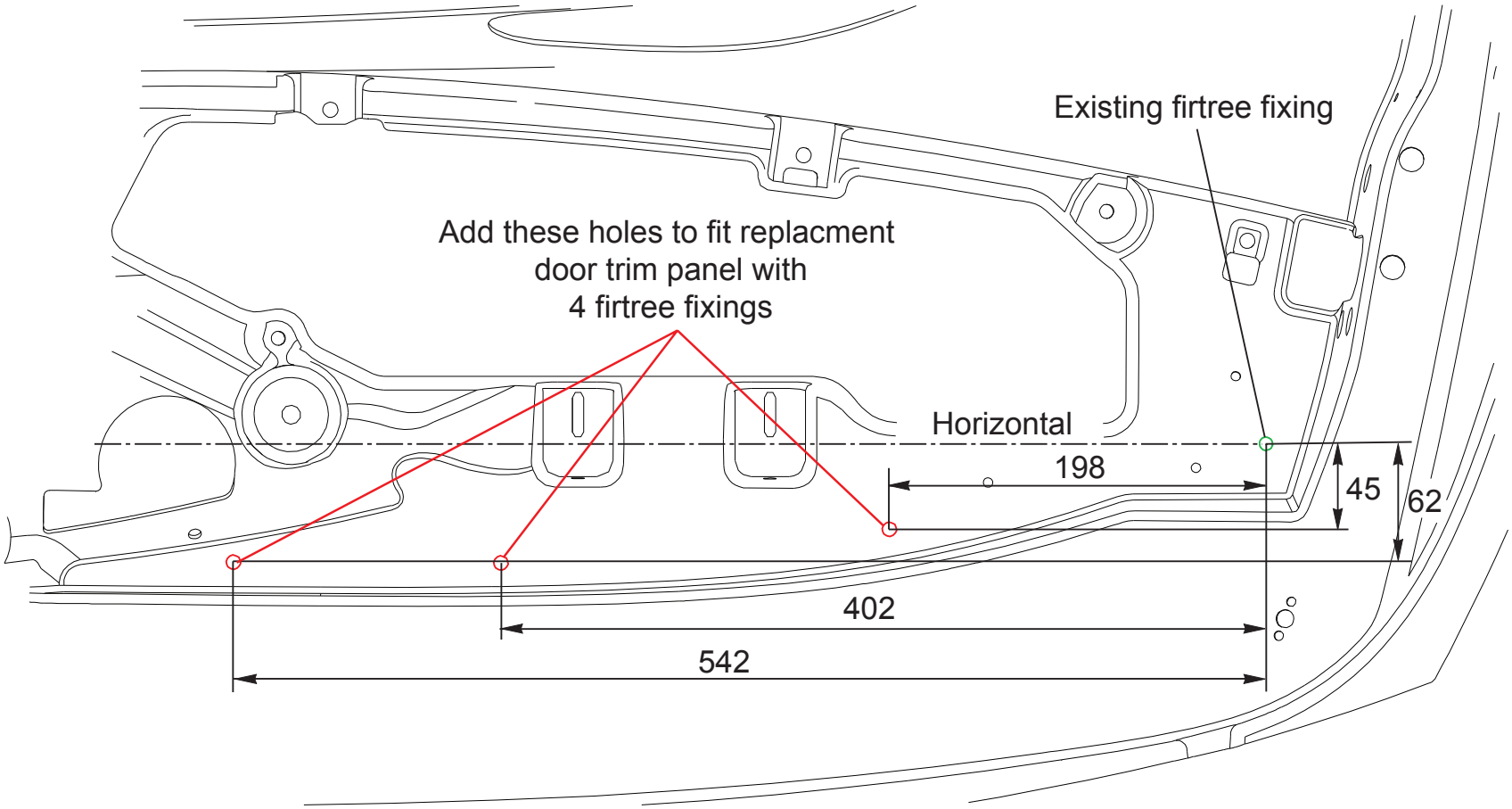

All dimensions in millimetres

LSL634

Function Code 15.13 Front Door Trims

Dep	Part Description	Remarks	Option	Part Number	Qty
01	Door Trim Panel, sateen grey leather, LH*			**A120U4089S**	1
01a	Door Trim Panel, sateen grey leather, RH*			**A120U4090S**	1
01b	Door Trim Panel, leather, LH*	A120V4087S R/B		**A120U4013JL**	1
01c	Door Trim Panel, leather, RH*	A120V4088S R/B		**A120U4014JL**	1
01d	Door Trim Panel, cloth, LH*	A120V4121S R/B		**A120U4013JC**	1
01e	Door Trim Panel, cloth, RH*	A120V4122S R/B		**A120U4014JC**	1
01f	Door Trim Panel, suedetex, LH*	A120V4141S R/B	Clubracer	**A120U4013JS**	1
01g	Door Trim Panel, suedetex, RH*	A120V4142S R/B	Clubracer	**A120U4014JS**	1
02	Insert, door trim, black cloth, LH*			**C117U0453J**	1
02a	Insert, door trim, black cloth, RH*			**C117U0452J**	1
02b	Insert, door trim, leather, LH*			**C122V0035JL**	1
02c	Insert, door trim, leather, RH*			**C122V0034JL**	1
02f	Insert, door trim, suedetex, LH*	A120V4143S	1ZR,2ZR Clubracer	**C122V0035JS**	1
02g	Insert, door trim, suedetex, RH*	A120V4144S	1ZR,2ZR Clubracer	**C122V0034JS**	1
02h	Insert, door trim, leather LH		Ivory white leather	**A120V4075S**	1
02i	Insert, door trim, leather RH		Ivory white leather	**A120V4076S**	1
03	Door Trim Panel, leather, LH*	A138V4175S	Elise Sport	**B138V4345JL**	1
03a	Door Trim Panel, leather, RH*	A138V4176S	Elise Sport	**B138V4346JL**	1

Function Code 15.13 Front Door Trims

Dep	Part Description	Remarks	Option	Part Number	Qty
03b	Door Trim Panel, cloth LH*	A138V4269S	Elise Sport	**B138V4345JC**	1
03c	Door Trim Panel, cloth RH*	A138V4270S	Elise Sport	**B138V4346JC**	1
04	Insert, door trim, leather, LH*		Elise Sport	**A138V4321JL**	1
04a	Insert, door trim, leather, RH*		Elise Sport	**A138V4322JL**	1
04b	Insert, door trim, alcantara, LH*	A120V4183S	Elise Sport	**A138V4321JA**	1
04c	Insert, door trim, alcantara, RH*	A120V4184S	Elise Sport	**A138V4322JA**	1
04d	Insert, door trim, tartan, LH*	A120V4187S	Elise Sport	**A138V4321JT**	1
04e	Insert, door trim, tartan, RH*	A120V4188S	Elise Sport	**A138V4322JT**	1
04f	Insert, door trim, cloth, LH*		Elise Sport	**A138V4321JC**	1
04g	Insert, door trim, cloth, RH*		Elise Sport	**A138V4322JC**	1
05	Screw, M5 x 20 , button hd. S/S, trim fix.			**A082W7173F**	8
05a	Screw, M5 x 20 , button hd. S/S black, trim fix.		Elise Club Racer	**A111W7152F**	8
06	Washer, flat, M5 x 10 x 0.8, trim to door		A082W4136F R/B	**A075W4011Z**	8
07	Spirenut, M5, trim to door			**B100W6372F**	8
08	Plastic Fastener, trim to door lower front			**A100W6479F**	2
09	Trim Panel, interior door pull recess, LH	Bonded to inner door		**A117B0371F**	1
09a	Trim Panel, interior door pull recess, RH	Bonded to inner door		**A117B0372F**	1
09b	Trim Panel, interior door pull recess, LH, leather*	Bonded to inner door A120V4045S R/B		**A138V4365JL**	1
09c	Trim Panel, interior door pull recess, RH, leather*	Bonded to inner door A120V4046S R/B		**A138V4366JL**	1

Function Code 15.13 Front Door Trims

Dep	Part Description	Remarks	Option	Part Number	Qty
09d	Trim Panel, interior door pull recess, LH, suedetex*	Bonded to inner door A120V4145S R/B	2ZR S Clubracer	**A138V4365JS**	1
09e	Trim Panel, interior door pull recess, RH, suedetex*	Bonded to inner door A120V4146S R/B	2ZR S Clubracer	**A138V4366JB**	1
10	Fir Tree Fastener, insert & trim fixing			**A116U0200F**	16
11	Trim Panel, interior release handle, LH	Black		**B117U0331F**	1
11a	Trim Panel, interior release handle, RH	Black		**B117U0332F**	1
11b	Trim Panel, interior release handle, LH	Black senosoft	MY16	**A138V4051F**	1
11c	Trim Panel, interior release handle, RH	Black senosoft	MY16	**A138V4052F**	1
12	Plastic Fastener, handle trim panel to door			**A100W6479F**	4
		*Use Trim Order Form LSL654			

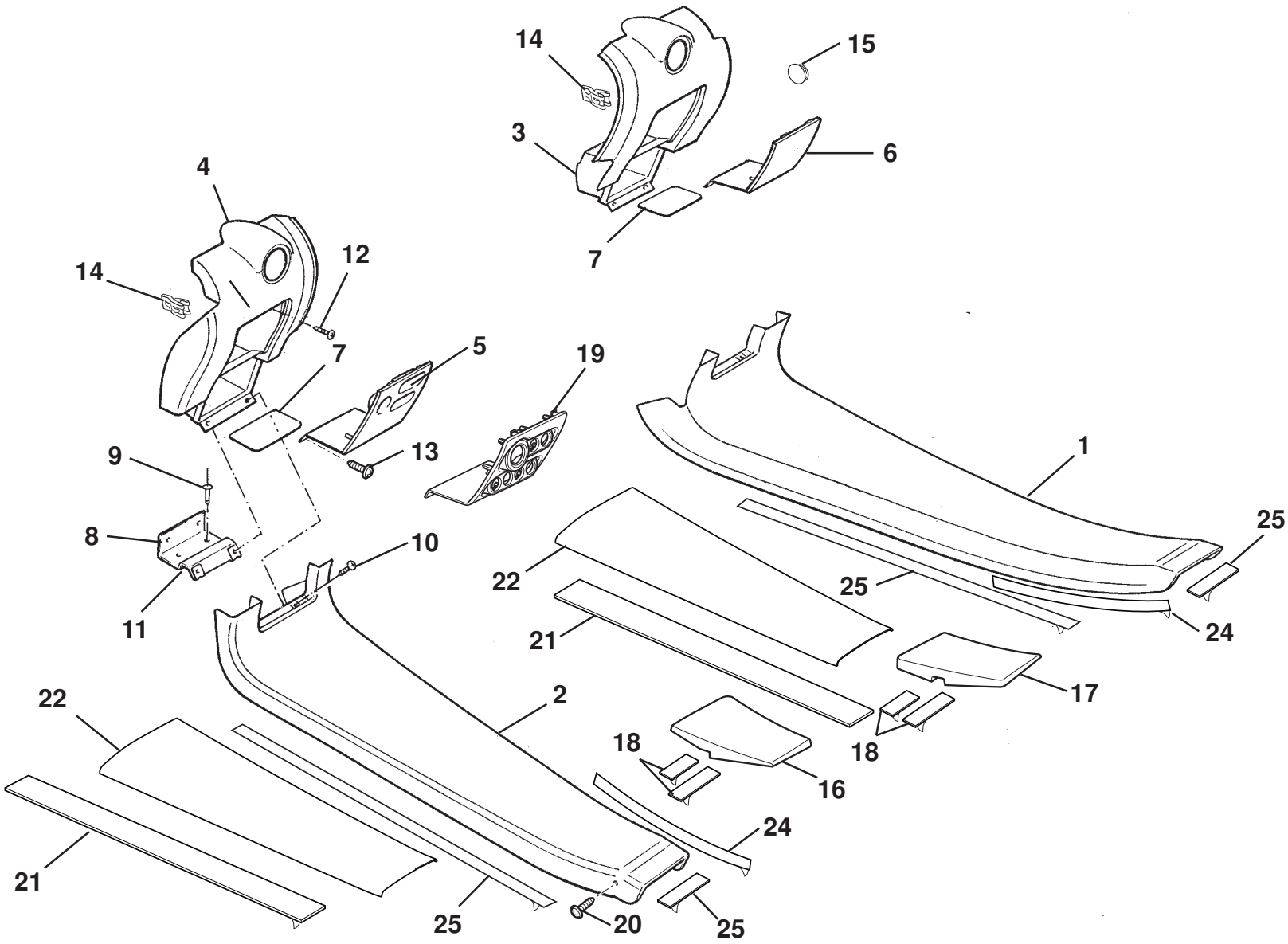

ELISE

15.18

Updated 5th March 2018

Service Parts List ELISE

Function Code 15.18 Interior Trim, Chassis Trim Panels

Dep	Part Description	Remarks	Option	Part Number	Qty
01	Sill Trim Panel, RH			**B121U0120F**	1
01a	Sill Trim Panel, RH, senosoft,charcoal			**A121U4002F**	1
01b	Sill Trim Panel, RH, leather	Black stitching	Black leather	**B138V4244F**	1
01c	Sill Trim Panel, RH, leather*		Leather	**A138V4276JL**	1
01d	Sill Trim Panel, RH, senosoft, black	May need item 31, see ** below	12 MY From Vin***	**A138V4268F**	1
01e	Sill Trim Panel, RH, black vinyl		Elise 16 MY	**A138V0757J**	1
01f	Sill Trim Panel, RH, carbon		From 17.5 MY	**A138V4370F**	1
01g	Sill Trim Panel, RH, alcantara*		From 17.5 MY, alcantara	**A138V4275JA**	1
02	Sill Trim Panel, LH			**B121U0119F**	1
02a	Sill Trim Panel, LH, senosoft, charcoal			**A121U4001F**	1
02b	Sill Trim Panel, LH, leather	Black stitching		**B138V4243F**	1
02c	Sill Trim Panel, LH, leather*		Leather	**A138V4275JL**	1
02d	Sill Trim Panel, LH, senosoft, black	May need item 30, see ** below	12 MY From Vin***	**A138V4267F**	1
02e	Sill Trim Panel, LH, black vinyl		16 MY	**A138V0755J**	1
02f	Sill Trim Panel, LH, carbon		From 17.5 MY	**A138V4369F**	1
02g	Sill Trim Panel, LH, alcantara*		From 17.5 MY, alcantara	**A138V4276JA**	1
03	'A' Post Trim Panel, RH			**C121U0016F**	1
03a	'A' Post Trim Panel, senosoft, charcoal, RH			**A121U4004F**	1

Function Code 15.18 Interior Trim, Chassis Trim Panels

Dep	Part Description	Remarks	Option	Part Number	Qty
03b	'A' Post Trim Panel, RH, leather	Black stitching	Black leather	**A138V4242F**	1
03c	'A' Post Trim Panel, RH, leather*		Leather	**A138V0749JL**	1
03d	'A' Post Trim Panel, senosoft, black, RH		12 MY From Vin***	**A138V4114F**	1
03e	'A' Post Trim Panel, RH, alcantara*		From 17.5 MY, alcantara	**A138V0749JA**	1
03f	'A' Post Trim Panel, RH, carbon		From 17.5 MY	**A138V4384F**	1
04	'A' Post Trim Panel, LH			**C121U0015F**	1
04a	'A' Post Trim Panel, senosoft, charcoal, LH			**A121U4003F**	1
04b	'A' Post Trim Panel, LH, leather	Black stitching	Black leather	**A138V4241F**	1
04c	'A' Post Trim Panel, LH, leather*		Leather	**A138V0748JL**	1
04d	'A' Post Trim Panel, senosoft, black, LH		12 MY From Vin***	**A138V4113F**	1
04e	'A' Post Trim Panel, LH, alcantara*		From 17.5 MY, alcantara	**A138V0748JA**	1
04f	'A' Post Trim Panel, LH, carbon		From 17.5 MY	**A138V4383F**	1
05	Switch Panel, 2 light switch LH			**C121U0037F**	1
05a	Switch Panel, 2 ligh switch senosoft, charcoal, LH			**A121U0183F**	1
05b	Switch Panel, 3 light switch,			**A121U0091F**	1
05c	Switch Panel, 3 light switch, senosoft, charcoal			**A121U0178F**	1
05d	Switch Panel, 3 light switch, senosoft, black		12 MY From Vin***	**B121U0178F**	1
06	Cover, 'A' post trim panel aperture			**C121U0035F**	1
06a	Cover, 'A' post trim panel aperture, senosoft, charcoal			**A121U0177F**	1
06b	Cover, 'A' post trim panel aperture, senosoft, black		12 MY From Vin***	**A138V0165F**	1
07	Mat, 'A' post pocket			**A121V0005K**	2

Function Code 15.18 Interior Trim, Chassis Trim Panels

Dep	Part Description	Remarks	Option	Part Number	Qty
08	Bracket, trim to chassis			**A121U0033F**	2
09	Pop Rivet, bracket to chassis			**A075W6071Z**	2
10	Screw, self tap. No. 8 x 3/4", panels to bracket			**A075W5074Z**	4
11	Spirenut, No. 8, panels to bracket	Also in pocket		**A075W6016Z**	8
12	Screw, self tap. No. 8 x 3/4", panel to dash upper			**A075W5074Z**	4
13	Screw, self tap. No. 8 x 3/4", switch panel & cover fixing			**A075W5074Z**	4
14	Clip, 'A' post trim panel retention			**A121U0156S**	4
15	Grommet Blanking 35.9mm, unused USB hole			**A138W6009F**	1
16	Foam Sill Trim Panel, LH	Bonded to chassis tub		**C121U0123F**	1
16a	Foam Sill Trim Panel, LH, carbon sill	Taped to chassis tub		**A138V4367F**	1
17	Foam Sill Trim Panel, RH	Bonded to chassis tub		**C121U0124F**	1
17a	Foam Sill Trim Panel, RH, carbon sill	Taped to chassis tub		**A138V4368F**	1
18	Double Sided Tape, 25 x 1.25, foam to chassis	150mm per sill		**A132U6138V**	As req.
19	Switch Panel Housing, senosoft, black		From 17.5 MY	**A138V0708F**	1
20	Screw, self tap. No. 6 x 1/2", flg. hd, pozi., trim fix.			**A089W5138F**	2
21	Sill Foam	Fitted to chassis tub, carbon sill		**A138V0818F**	2
22	Sill Foam Lining	Carbon sill		**A138V0819J**	2
23	Adhesive Tape 3mm x 25mm	4 x 150mm non carbon sill 6 x 150mm carbon sill		**A132U6138V**	As req.
24	Anti Squeak Tape	2 x 200mm Fitted to non carbon sill		**A132V6050V**	As req.

Function Code 15.18 Interior Trim, Chassis Trim Panels

Dep	Part Description	Remarks	Option	Part Number	Qty
25	Foam Tape, 19mm x 3mm, trim to chassis	2 x 660mm & 2 x 580mm per non carbon sill trim		**A082U6067F**	As req.
		*Use Trim Order Form LSL654			
		**Items 30 & 31 were originally bonded to underside of sill trim, later cars this is stuck to the sill (changed during 2012 MY)			
		***12 MY from approx vin CH_10646			

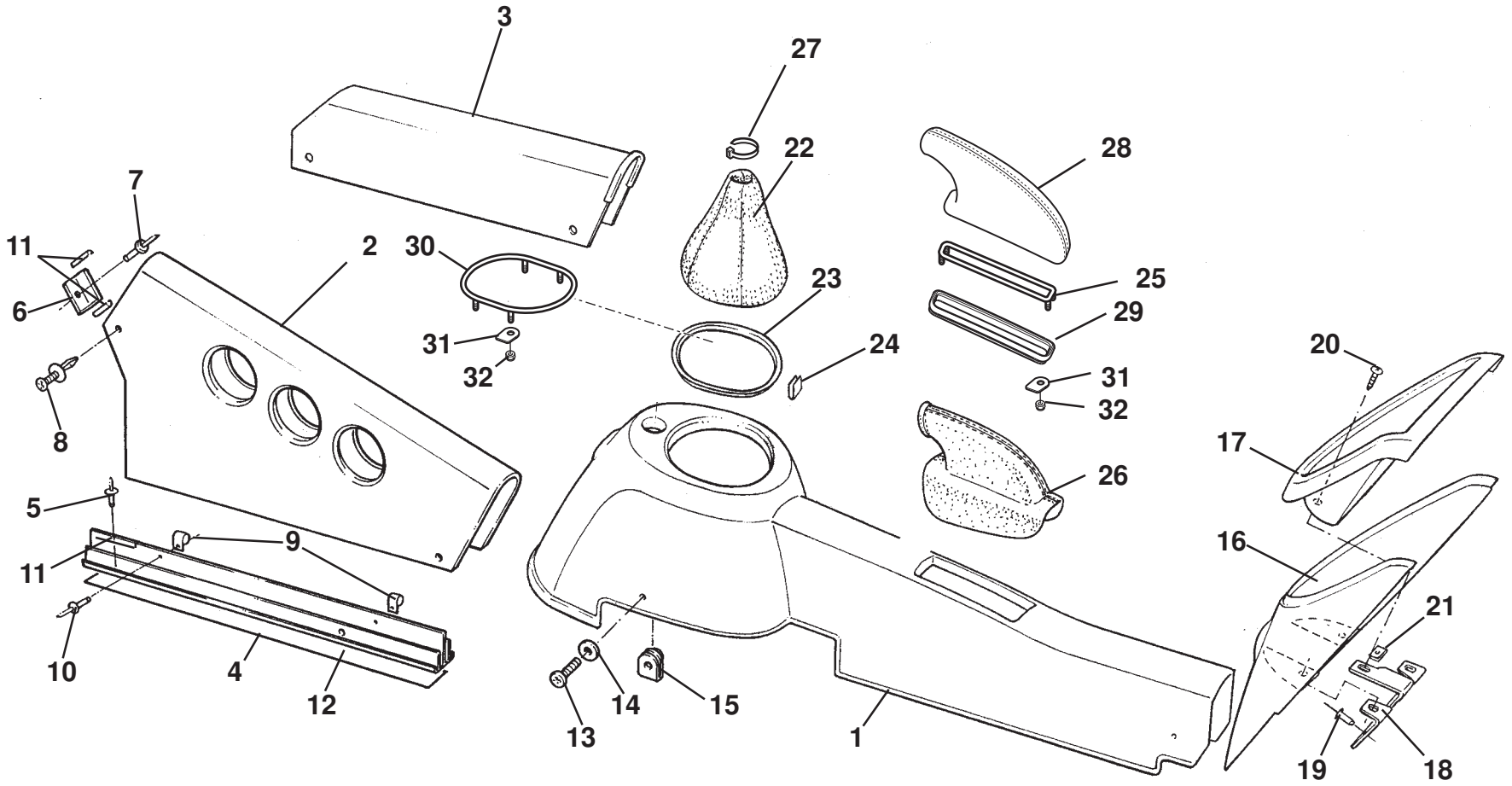

ELISE

15.19 page1

Updated 3rd April 2017

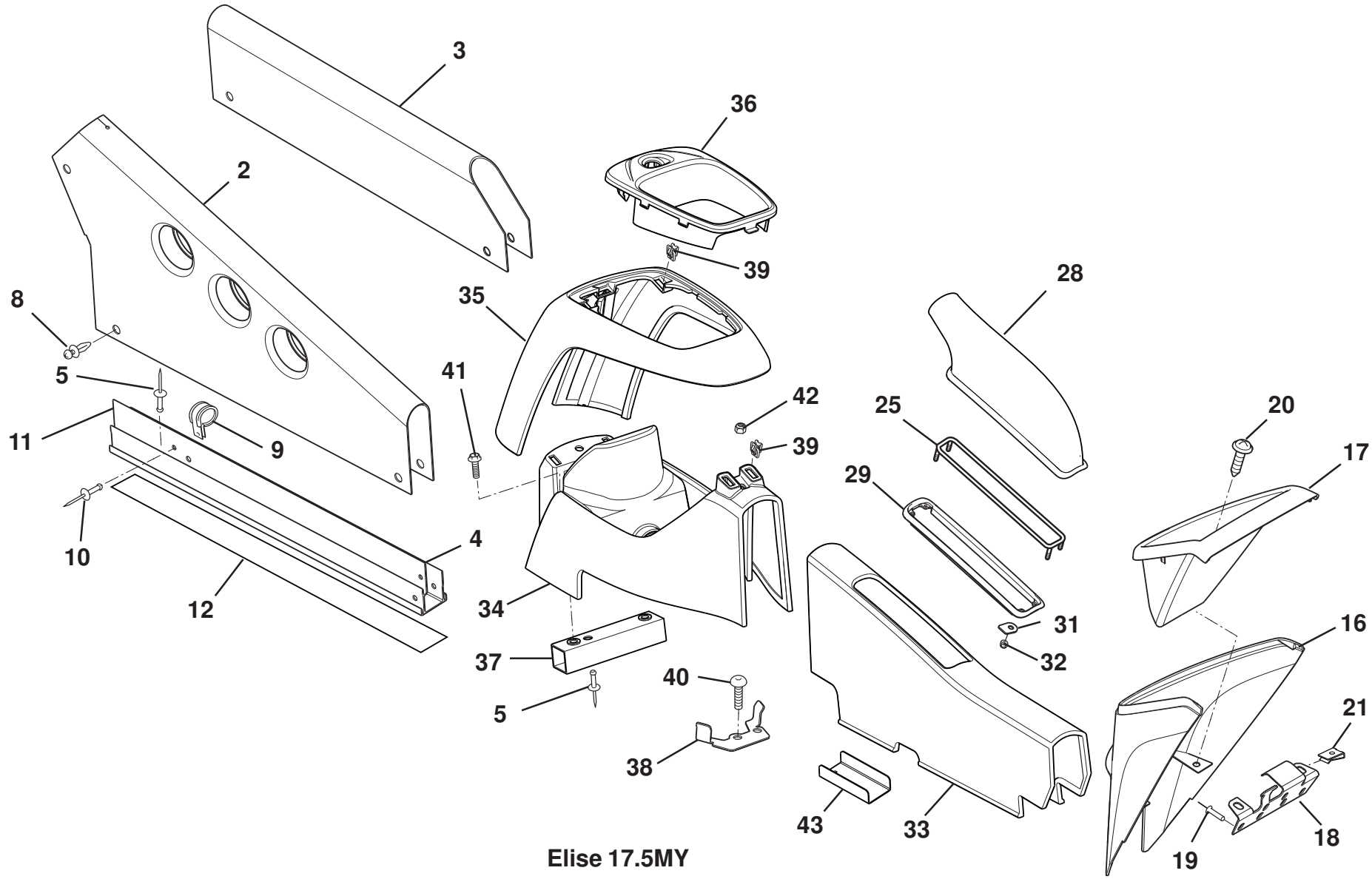

Elise 17.5MY

ELISE

15.19 page2

Updated 1st August 2017

Function Code 15.19 Centre Tunnel Trim, Gear Lever Gaiters/Shrouds

Dep	Part Description	Remarks	Option	Part Number	Qty
01a	Cover, gear lever/parking brake, RHD leather*		A120V4032S R/B	**A120U0099JL**	1
01b	Cover, gear lever/parking brake, LHD leather*		A120V4031S R/B	**A120U0104JL**	1
01c	Cover, gear lever/parking brake, LHD leather*	Black stitching, with hole for TC switch	Optional traction control	**A120V4033S**	1
01d	Cover, gear lever/parking brake, RHD leather*	Black stitching, with hole for TC switch	Optional traction control	**A120V4034S**	1
01e	Cover, gear lever/parking brake, LHD, microfibre*	Includes gaiters		**A120V4039S**	1
01f	Cover, gear lever/parking brake, RHD, microfibre*	Includes gaiters	A120V4040S R/B	**A120U0104JM**	1
01g	Cover, gear lever/parking brake, LHD, microfibre*	Includes gaiters and hole for TC switch	Optional traction control	**A120V4041S**	1
01h	Cover, gear lever/parking brake, RHD, microfibre*	Includes gaiters and hole for TC switch	Optional traction control	**A120V4042S**	1
01i	Cover, gear lever/parking brake, RHD	Unpainted	Elise Club Racer, Elise 20th edition	**B120U4088S**	1
01j	Cover, gear lever/parking brake, LHD	Unpainted	Elise Club Racer, Elise 20th edition	**B120U4087S**	1
01k	Cover, gear lever/parking brake, leather, RHD*	Includes gaiters	12MY A120V0428J R/B	**A120V0429JL**	1
01l	Cover, gear lever/parking brake, leather, LHD*	Includes gaiters	12MY A120V0427J R/B	**A120V0430JL**	1
01m	Cover, gear lever/parking brake, black paint RHD	Includes gaiters	12MY	**A120V0465F**	1
01n	Cover, gear lever/parking brake, black paint LHD	Includes gaiters	12MY	**A120V0464F**	1
01o	Cover, gear lever/parking brake, cloth LHD*		12MY	**A120V0429JC**	1

Function Code 15.19 Centre Tunnel Trim, Gear Lever Gaiters/Shrouds

Dep	Part Description	Remarks	Option	Part Number	Qty
01p	Cover, gear lever/parking brake, cloth RHD*		12MY	**A120V0430JC**	1
01s	Cover, gear lever/parking brake, alcantara LHD*	Part Alcantara, sides and handbrake area leather	Elise sport A120V4221SR/B	**A120V0429JA**	1
01t	Cover, gear lever/parking brake, alcantara RHD*	Part Alcantara, sides and handbrake area leather	Elise sport A120V4223S R/B	**A120V0430JA**	1
02	Cover, tunnel front, LHD	Alloy	LHD	**A111A0106F**	1
03	Cover, tunnel front, parallel, RHD	Alloy	RHD	**A116A0147F**	1
04	Mounting Bracket, front tunnel to floor			**D111A0067F**	1
05	Blind Rivet, tunnel mount fix.			**A111W6613F**	4
06	Mounting Bracket, front tunnel to toeboard			**B111A0069F**	1
07	Pop Rivet, 3/16" x 9/16", bracket fix.			**A082W6243F**	1
08	Plastic Fastener, tunnel fix.			**A082W6505F**	5
09	'P' Clip, harness retention			**A082W5457F**	2
10	Pop Rivet, 'P' clip fix.			**A075W6087Z**	2
11	Edging Strip, harness protection			**B075U6054V**	0.16M
12	Tape, double sided, tunnel mount to floor			**B075U6070V**	0.55M
13	Screw, pan hd., torx, cover fix.			**A117F6001F**	2
14	Washer, flat, M4 x 9, cover fix.			**A082W4099F**	2
15	Spire Nut, plastic, cover fix.			**A117F6000F**	2
16	Console, rear lower, silver			**B120U0013F**	1
16a	Console, rear lower, leather*		A120V0355S R/B	**A124U0139JL**	1

Function Code 15.19 Centre Tunnel Trim, Gear Lever Gaiters/Shrouds

Dep	Part Description	Remarks	Option	Part Number	Qty
16b	Console, rear lower, cloth*		12MY A120V0492S R/B	**A124U0139JC**	1
16c	Console, rear lower, alcantara*			**A124U0139JA**	1
16d	Console, rear lower, carpet (velcar)*			**A124U0139JV**	1
17	Console/Stowage Pocket, black, rear upper			**A120U0014F**	1
18	Bracket, console rear to chassis			**B120U0028F**	3
19	Pop Rivet, bracket to chassis			**A111W6613F**	3
20	Screw, No. 6 x 3/8", flg. pozi., console to bracket			**A075W5019F**	3
21	Spirenut, No. 6, console to bracket			**A075W6014Z**	3
22	Gaiter, gearlever, black leather	Perforated		**A120V0001K**	1
22a	Gaiter, gearlever, black leather	Plain		**B120V0001K**	1
22b	Gaiter, gearlever, leather*		12MY	**A120V0419KL**	1
22c	Gaiter, gearlever, suedetex		Club Racer 1ZR,2ZR	**A120V0595S**	1
22d	Gaiter, gearlever, leather	Silver stitching	Black leather	**A138V0423S**	1
22e	Gaiter, gearlever, leather		Ivory white leather	**A138V0424S**	1
23	Retainer, gearlever gaiter			**A120V0002F**	1
23a	Bezel, gear lever		12MY	**B120V0415F**	1
24	Clip, gaiter to cover			**A120W6767F**	6
25	Retainer Handbrake Gaiter			**C138V0219F**	1
26	Gaiter, parking brake, black perforated leather*			**A120V0172J**	1
26a	Gaiter, parking brake, leather*			**A120V0414S**	1
26b	Gaiter, parking brake, suedetex*		Club Racer 1ZR,2ZR	**A120V0596S**	1

Function Code 15.19 Centre Tunnel Trim, Gear Lever Gaiters/Shrouds

Dep	Part Description	Remarks	Option	Part Number	Qty
27	Cable Tie, gaiter to gearknob			**A075W6038Z**	1
28	Gaiter, parking brake, leather		12MY	**A120V0412KL**	1
28a	Gaiter, parking brake, Perforated black leather*		Elise Sport		1
28b	Gaiter, parking brake, leather		Ivory white leather	**A138V0437S**	1
28c	Gaiter, parking brake, leather		Venom red leather	**A138V0438S**	1
28d	Gaiter, parking brake, leather		Cognac brown leahter	**A138V0439S**	1
28e	Gaiter, parking brake, leather	Silver stitching	Suedetex	**A138V0446S**	1
29	Bezel, parking brake gaiter		12MY	**B120V0410F**	1
30	Retainer Gear Shift Gaiter		12MY	**A138V0218F**	1
31	Plate		12MY	**A138V0292F**	4
32	Nyloc Nut, M3		12MY	**A079W3060F**	4
33	Centre Console, middle, leather*		17.5MY A138V0843S R/B	**B138V0722JL**	1
33a	Centre Console, middle, alcantara*		17.5MY	**B138V0722JA**	1
33b	Centre Console, middle, carpet (velcar)*		17.5MY	**B138V0722JV**	1
33c	Centre Console, middle, leather*		17.5MY, from Vin HH__1438 & from Vin HH__1457 on	**C138V0722JL**	1
33d	Centre Console, middle, alcantara*		17.5MY, from Vin HH__1438 & from Vin HH__1457 on	**C138V0722JA**	1
33e	Centre Console, middle, carpet (velcar)*		17.5MY, from Vin HH__1438 & from Vin HH__1457 on	**C138V0722JV**	1
34	Centre Console, front lower, leather*		17.5MY A138V0849S R/B	**B138V0723JL**	1
34a	Centre Console, front lower, alcantara*		17.5MY	**B138V0723JA**	1

Function Code 15.19 Centre Tunnel Trim, Gear Lever Gaiters/Shrouds

Dep	Part Description	Remarks	Option	Part Number	Qty
34b	Centre Console, front lower, carpet (velcar)*		17.5MY	**B138V0723JV**	1
34c	Centre Console, front lower, leather*		17.5MY, from Vin HH__1438 & from Vin HH__1457 on	**C138V0723JL**	1
34d	Centre Console, front lower, alcantara*		17.5MY, from Vin HH__1438 & from Vin HH__1457 on	**C138V0723JA**	1
34e	Centre Console, front lower, carpet (velcar)*		17.5MY, from Vin HH__1438 & from Vin HH__1457 on	**C138V0723JV**	1
35	Centre Console, front upper LHD, leather*		17.5MY	**A138V0725JL**	1
35a	Centre Console, front upper RHD, leather*		17.5MY	**A138V0724JL**	1
35b	Centre Console, front upper LHD, alcantara*		17.5MY	**A138V0725JA**	1
35c	Centre Console, front upper RHD,alcantara*		17.5MY	**A138V0724JA**	1
36	Moulding Gear Shift Bezel		17.5MY	**A138V0727F**	1
37	Mounting Assembly, console front		17.5MY	**A138V0685F**	1
38	Retaining Bracket, console LHD		17.5MY	**A138V4357K**	1
38a	Retaining Bracket, console RHD		17.5MY	**A138V4358K**	1
39	Trim Clip			**A132W6111F**	7
40	Screw M8 x 20, skt btn hd			**A075W7022Z**	2
41	Screw M6 x 20, hex flg hd			**A132W5004F**	2
42	Nut Nyloc M5			**A132W3000F**	1
43	Bracket Console Alignment		17.5MY	**A138V0575G**	1

*Use Trim Order Form LSL654

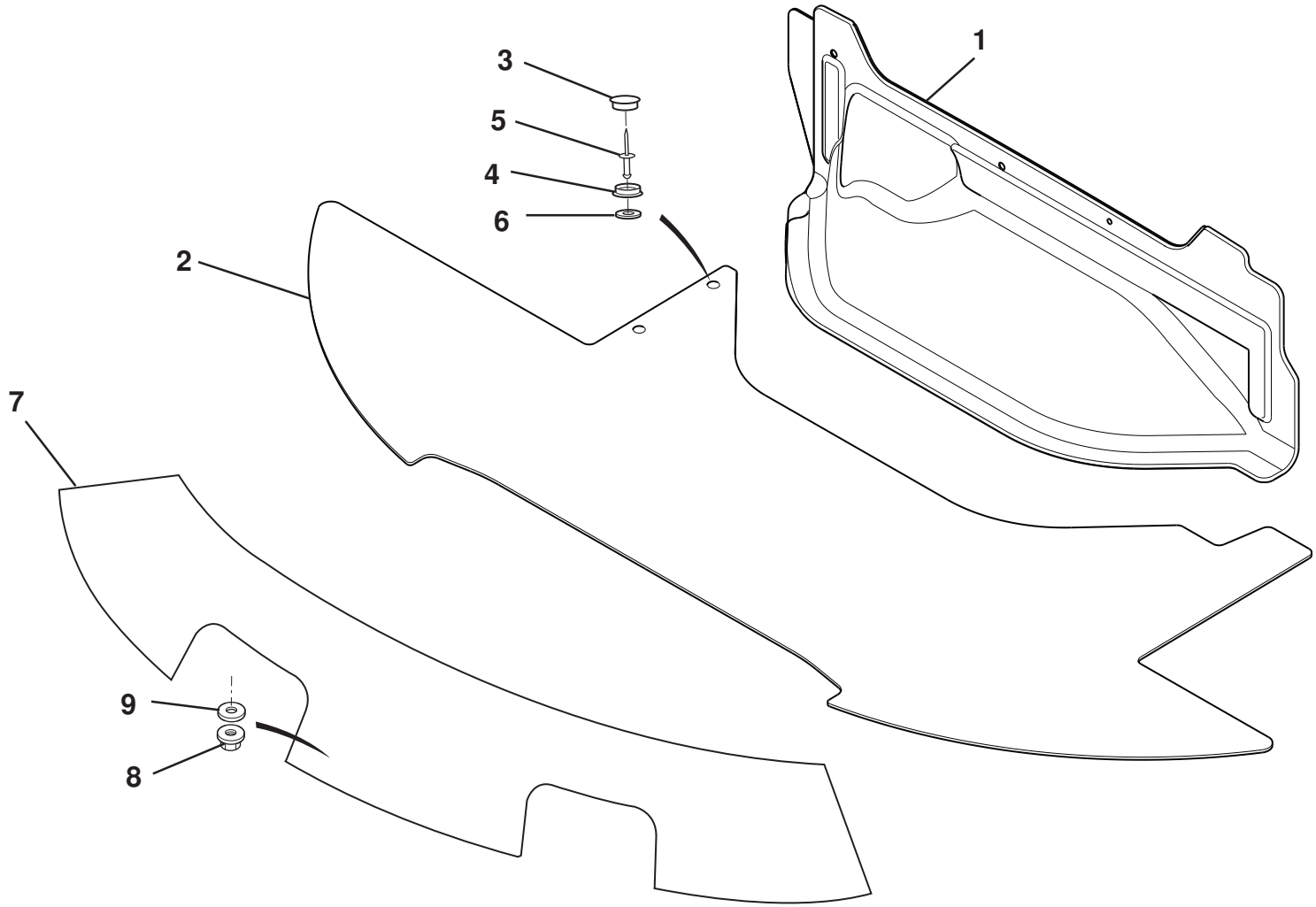

ELISE

15.24

Updated 3rd July 2017

Function Code 15.24 Luggage Compartment Carpet

Dep	Part Description	Remarks	Option	Part Number	Qty
01b	Carrier/Carpet Assembly, boot bulkhead			**B120B0363J**	1
02a	Carpet, boot floor			**B120B0306J**	1
03	Press Fastener Button, bulkhead/floor carpet fix.	Part of item 1		**A111B6074F**	9
03a	Press Fastener Socket, bulkhead carpet fix.	Part of item 1		**A111B6075F**	9
04	Press Fastener Stud, carpet to bulkhead/floor			**A111B6076F**	9
05	Pop Rivet, fastener fix.			**A075W6070Z**	9
06	Washer, flat, 1/8 x 3/8"			**A075W4001Z**	9
07	Carpet, boot rear transom, harness			**A120V0004F**	1
08	Nut M5			**A704W6000F**	2
09	Washer M6 x 18 x1.6			**A126W4213F**	2

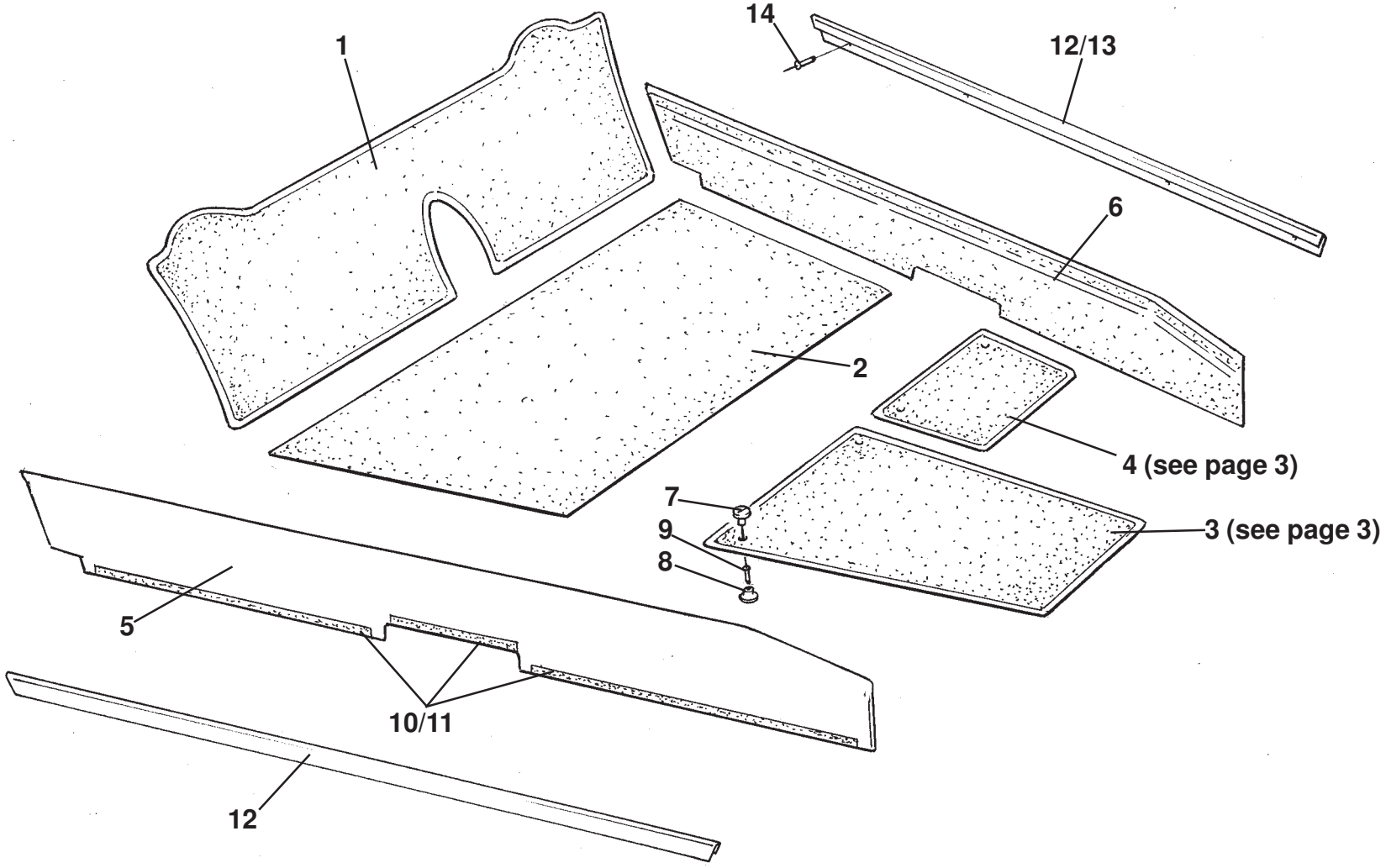

Up to MY16

ELISE

15.30 page1

Updated 2nd May 2017

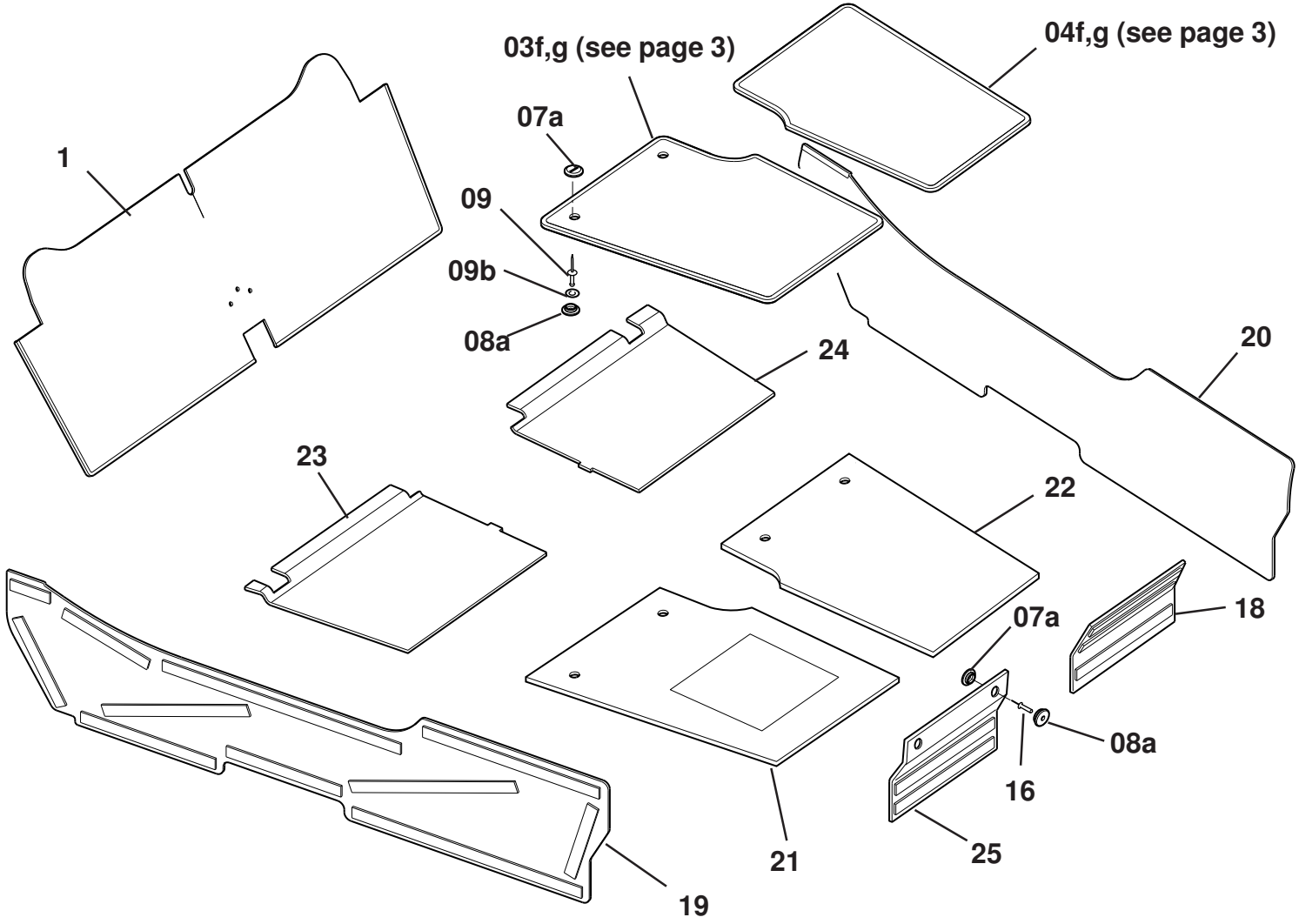

MY16 RHD Illustrated

ELISE

15.30 page 2

Updated 2nd May 2017

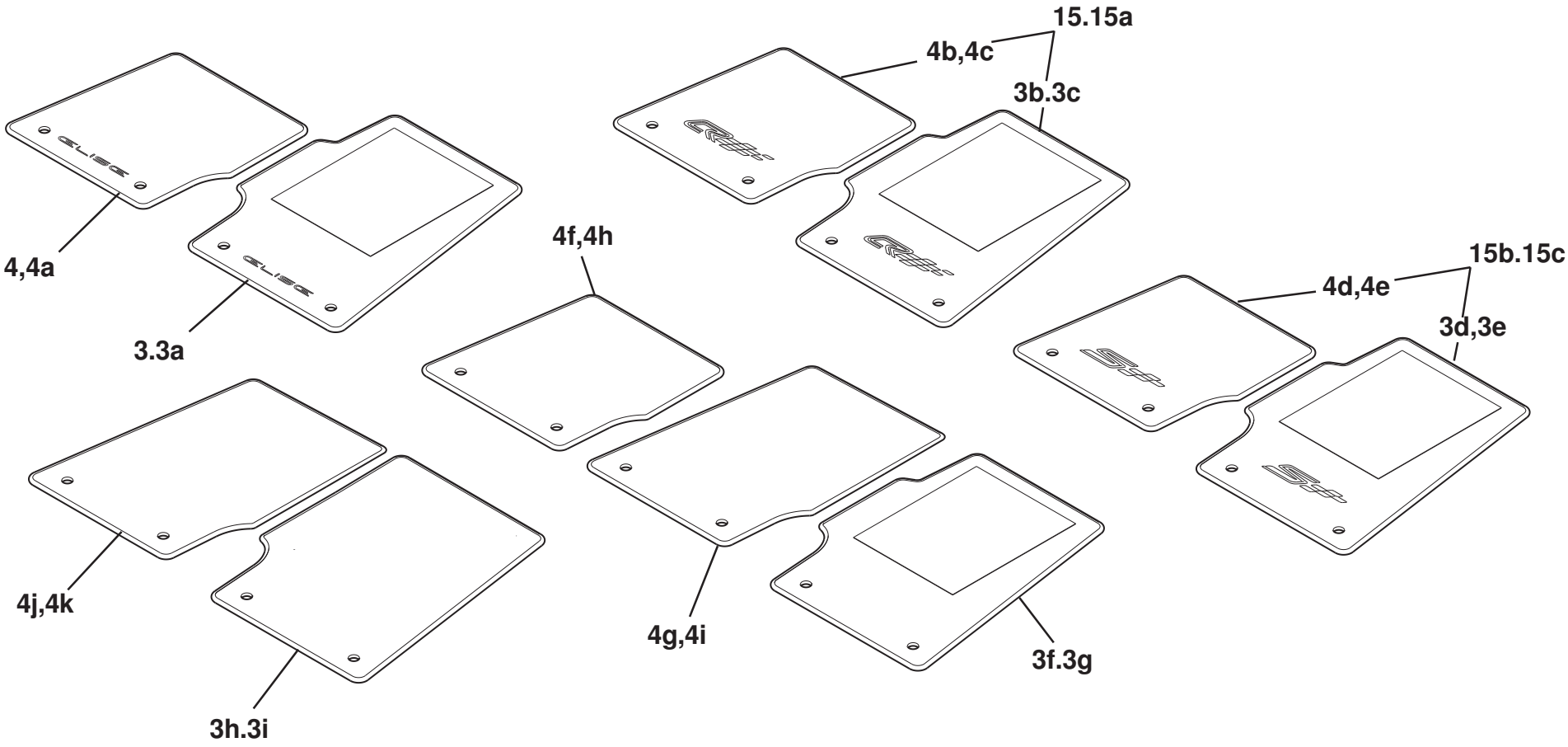

RHD Illustrated

ELISE

15.30 page 3

Updated 1st August 2017

Function Code 15.30 Carpeting & Mats

Dep	Part Description	Remarks	Option	Part Number	Qty
01	Carpet, rear bulkhead, black			**C120V0042K**	1
02	Carpet, floor underseat, black			**A117V0095K**	1
03	Carpet, footwell, driver, black, embroidered, Elise, RHD		Elise '11 MY	**A120V0393J**	1
03a	Carpet, footwell, driver, black, embroidered, Elise, LHD		Elise '11 MY	**A120V0391J**	1
03b	Carpet, footwell, driver, RHD		Elise Club Racer '11 MY	**A120V0360F**	1
03c	Carpet, footwell, driver, LHD		Elise Club Racer '11 MY	**A120V0358F**	1
03d	Carpet, footwell, driver, RHD		Elise S Club Racer 2ZR	**A120V0577J**	1
03e	Carpet, footwell, driver, LHD		Elise S Club Racer 2ZR	**A120V0575J**	1
03f	Carpet, footwell, driver, RHD		Elise 20th edition	**A120V0058F**	1
03g	Carpet, footwell, driver, LHD		Elise 20th edition	**A120V0060F**	1
03h	Carpet, footwell, driver, RHD		MY16	**A138V0717F**	1
03i	Carpet, footwell, driver, LHD		MY16	**A138V0715F**	1
04	Carpet, footwell, passenger, black, embroidered, Elise, RHD		Elise '11 MY	**A120V0394J**	1
04a	Carpet, footwell, passenger, black, embroidered, Elise, LHD		Elise '11 MY	**A120V0392J**	1
04b	Carpet, footwell, passenger, RHD		Elise Club Racer '11 MY	**A120V0361F**	1
04c	Carpet, footwell, passenger, LHD		Elise Club Racer '11 MY	**A120V0359F**	1
04d	Carpet, footwell, passenger, RHD		Elise S Club Racer 2ZR	**A120V0578J**	1

Function Code 15.30 Carpeting & Mats

Dep	Part Description	Remarks	Option	Part Number	Qty
04e	Carpet, footwell, passenger, LHD		Elise S Club Racer 2ZR	**A120V0576J**	1
04f	Carpet, footwell, passenger, RHD	With footrest	Elise 20th edition	**A120V0059F**	1
04g	Carpet, footwell, passenger, RHD	No footrest	Elise 20th edition, 8908dar4050-007		1
04h	Carpet, footwell, passenger, LHD	With footrest	Elise 20th edition	**A120V0061F**	1
04i	Carpet, footwell, passenger, LHD	No footrest	Elise 20th edition, 8908dar4040-050		1
04j	Carpet, footwell, passenger, RHD		MY16	**A138V0718F**	1
04k	Carpet, footwell, passenger, LHD		MY16	**A138V0716F**	1
05	Carpet, sill, black, RH			**A117V0602K**	1
05d	Carpet, sill, black, RH		Hot Climate	**A120V4024K**	1
06	Carpet, sill, black, LH, RHD			**A117V0603K**	1
06a	Carpet, sill, black, LH, LHD			**A117V0604K**	1
06h	Carpet, sill, black, LH		Hot Climate	**A120V4023K**	1
07	Carpet Fixing, male, footwell carpet, silver			**B120V0075F**	4
07a	Carpet Fixing, male, footwell carpet, black			**A124V0054F**	4
08	Carpet Fixing, female, footwell carpet, silver			**B120V0076F**	4
08a	Carpet Fixing, female, footwell carpet, black			**A124V0055F**	4
09	Pop Rivet, fixing to floor		Standard	**A111W6574F**	4
09a	Pop Rivet, fixing to floor	See Service Bulletin 2004/14	When secondary floor fitted	**A120V6003S**	4
09b	Washer, flat, 3/16 x 0.5", fixing to floor	Not illustrated		**A075W4000Z**	4

Function Code 15.30 Carpeting & Mats

Dep	Part Description	Remarks	Option	Part Number	Qty
10	Velcro Loop, carpet to chassis	Items: 1, 5 & 6 only		**A082V6088V**	5.5M
11	Velcro Hook, chassis to carpet	As above, plus footwells only		**A082V6058V**	8M
12	Finisher, sill carpet, RHD, RH & LH; LHD, RH	Long, 1 off, LHD		**B117U0430F**	2
13	Finisher, sill carpet, LHD, LH	Short		**C117U0431F**	1
14	Pop Rivet, finisher to chassis			**A075W6094Z**	8
15	Footmat Set, embroidered, Elise RHD		Elise Club Racer '11 MY	**A120V4036F**	1
15a	Footmat Set, embroidered, Elise LHD		Elise Club Racer '11 MY	**A120V4035F**	1
15b	Footmat Set, embroidered, Elise RHD		Elise S Club Racer 2ZR	**A120V4132F**	1
15c	Footmat Set, embroidered, Elise LHD		Elise S Club Racer 2ZR	**A120V4131F**	1
16	Pop Rivet, fixing to bulkhead		MY16	**A111W6613F**	2
17	Carpet Step Plate LH	Not illustrated	Gulf States	**A120V4025K**	1
17a	Carpet Step Plate RH	Not illustrated	Gulf States	**A120V4026K**	1
18	Carpet Passenger Front Bulkhead RHD		MY16	**B138V0705F**	1
18a	Carpet Passenger Front Bulkhead LHD		MY16	**B138V0699F**	1
19	Carpet Sill RH RHD		MY16	**C138V0654F**	1
19a	Carpet Sill RH LHD		MY16	**D138V0617F**	1
20	Carpet Sill LH RHD		MY16	**C138V0655F**	1
20a	Carpet Sill LH LHD		MY16	**D138V0616F**	1
21	Carpet Driver Front RHD		MY16	**A138V0735J**	1
21a	Carpet Driver Front LHD		MY16	**A138V0734J**	1
22	Carpet Passenger Front RHD		MY16	**B138V0702F**	1

Function Code 15.30 Carpeting & Mats

Dep	Part Description	Remarks	Option	Part Number	Qty
22a	Carpet Passenger Front LHD		MY16	**B138V0696F**	1
23	Carpet Driver Rear RHD		MY16	**B138V0701F**	1
23a	Carpet Driver Rear LHD		MY16	**B138V0695F**	1
24	Carpet Passenger Rear RHD		MY16	**B138V0703F**	1
24a	Carpet Passenger Rear LHD		MY16	**B138V0697F**	1
25	Carpet Driver Front Bulhead RHD		MY16	**A138V0704F**	1
25a	Carpet Driver Front Bulhead LHD		MY16	**A138V0698F**	1

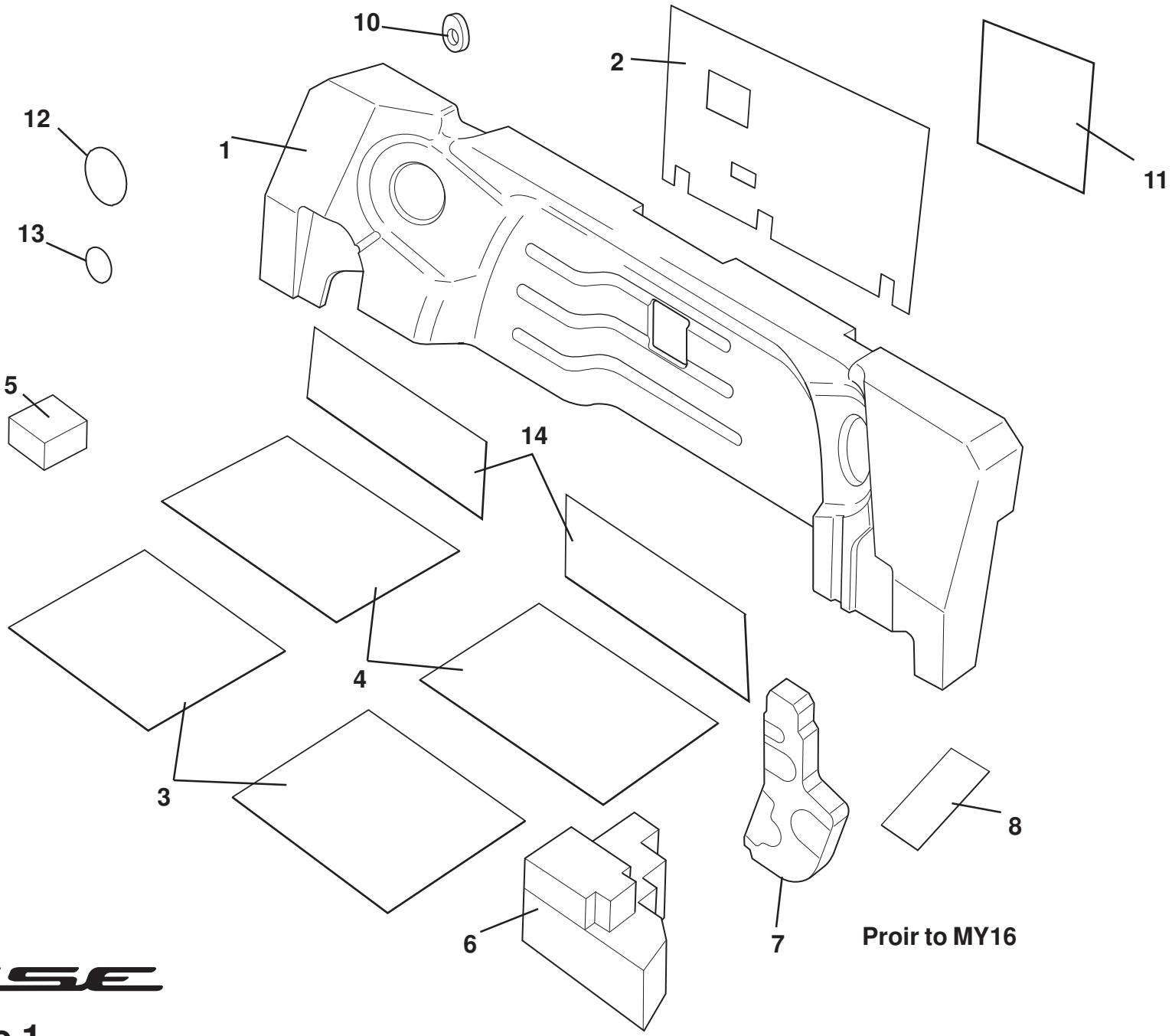

ELISE

16.01 page 1

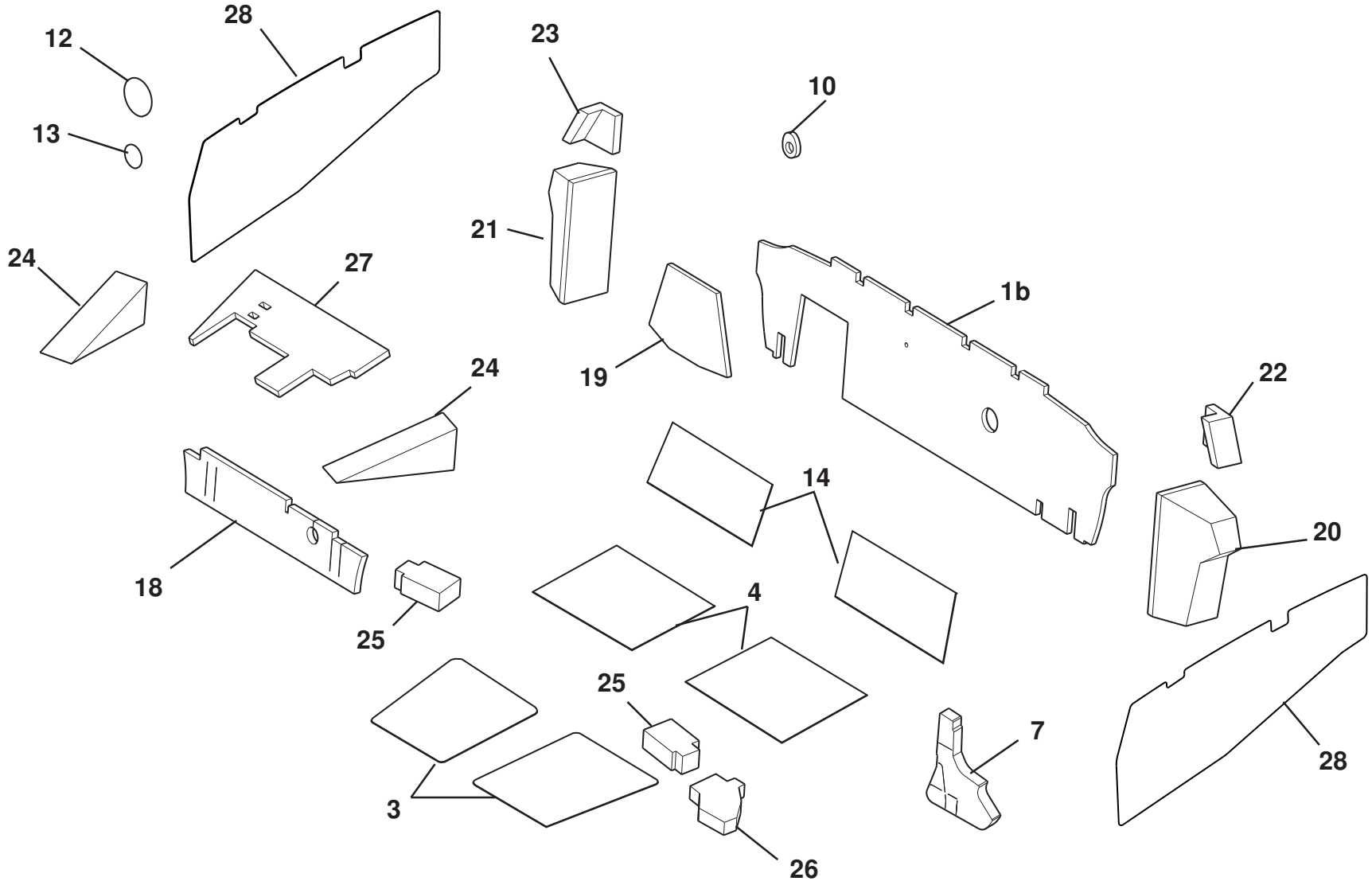

From MY16

ELISE

16.01 page 2

Updated 4th June 2018

Retrofitting MY16 NVH to earlier models

Views to show how to assemble and instal the NVH

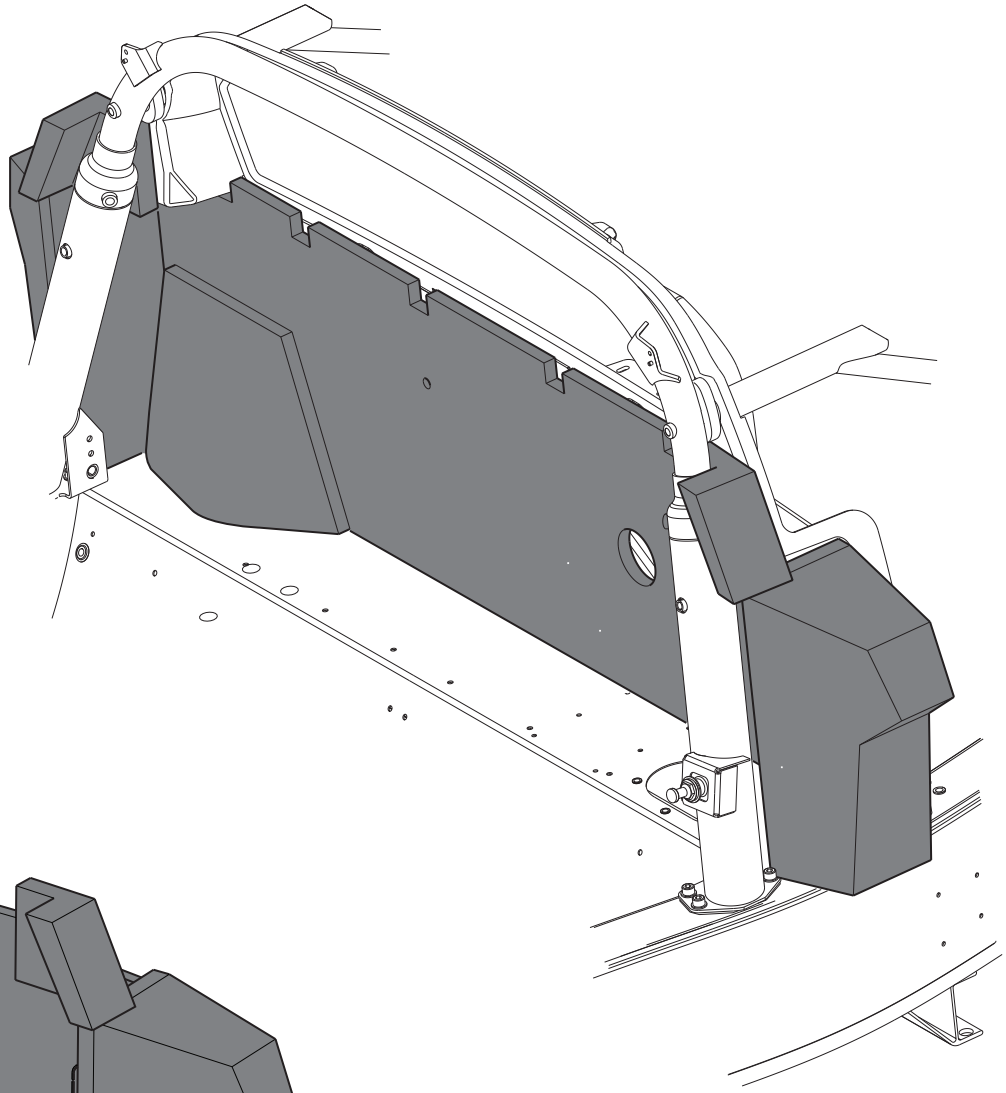

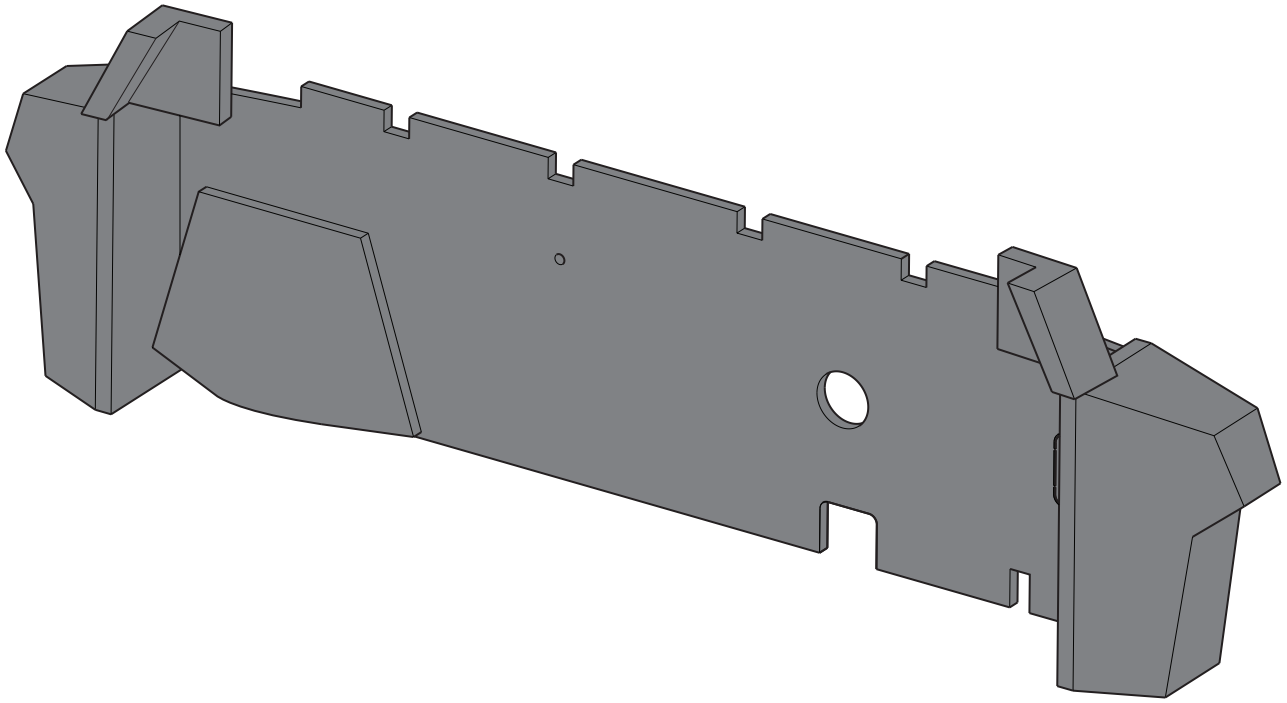

Updated 3rd April 2017

LSL651

Function Code 16.01 Passenger Compartment Sound Insulation

Dep	Part Description	Remarks	Option	Part Number	Qty
01	NVH Foam Panel, bulkhead	Modify to fit 2ZR	NVH pack	**A120V0003K**	1
01a	NVH Foam, block	Not illustrated, Use for bulkhead	Gulf States	**A120V0346F**	4
01b	NVH Foam Panel, bulkhead		NVH pack MY16	**A138V0691F**	1
02	Sheet Damping, bulkhead		NVH pack	**A117V0511F**	1
03	Sheet Damping, footwell		NVH pack	**A117B0558F**	2
03a	Insulation Pad, footwell LH	Not illustrated	Gulf States	**A120V4017F**	1
03b	Insulation Pad, footwell RH	Not illustrated	Gulf States	**A120V4018F**	1
04	Sheet Damping, seats		NVH pack	**A116V0309F**	2
04a	Insulation Pad, underseat LH	Not illustrated	Gulf States	**A120V4019F**	1
04b	Insulation Pad, underseat RH	Not illustrated	Gulf States	**A120V4020F**	1
05	NVH Foam, steering column		NVH pack	**A117V0532Z**	1
06	NVH Foam Assembly 'A' pillar lower, LH		NVH pack	**A120B4001J**	1
06a	NVH Foam Assembly 'A' pillar lower, RH		NVH packR/B	**A120B4002J**	1
07	NVH Foam, bodyside front	1ZR	NVH pack	**A120B0074F**	1
07a	NVH Foam, bodyside front	2ZR	NVH pack	**B120B0074F**	1
08	Tape, Tessaband 4661, sill holes covering		NVH pack	**A116V6008F**	1.2M
09	Insulation Boot Inner GCC	Not illustrated	Gulf States	**A120V0353F**	1
10	Seal, Seat Belt Anchor Frame to bulkhead		NVH pack	**A120B0207F**	2

Function Code 16.01 Passenger Compartment Sound Insulation

Dep	Part Description	Remarks	Option	Part Number	Qty
11	Insulation Alarm Sensor, RF shield	Self adhesive foil		**A121B0134F**	1
12	Blanking Patch, scuttle beam holes, 38mm dia,			**A116A0184F**	8
13	Blanking Patch, scuttle beam holes, 20mm dia.			**A111V0206F**	9
14	NVH Mat			**A116V0120F**	2
15	Seal	Not illustrated, Secondary unit to bulkhead	Gulf States	**A120H0002F**	1
16	Insulation Pad, sill LH	Not illustrated	Gulf States	**A120V4015F**	1
16a	Insulation Pad, sill RH	Not illustrated	Gulf States	**A120V4016F**	1
17	Insulation Pad, tank panel	Not illustrated	Gulf States	**A120V0352F**	1
18	NVH Fleece, front bulkhead lower LHD		NVH pack MY16	**A138V4343F**	1
18a	NVH Fleece, front bulkhead lower RHD		NVH pack MY16	**A138V4344F**	1
19	NVH Foam Panel, bulhead insert		NVH pack MY16	**A138V0692F**	1
20	NVH Block Bulkhead LH		NVH pack MY16	**A138V4337F**	1
21	NVH Block Bulkhead RH		NVH pack MY16	**A138V4338F**	1
22	NVH Block Bulkhead Upper LH		NVH pack MY16	**A138V4339F**	1
23	NVH Block Bulkhead Upper RH		NVH pack MY16	**A138V4340F**	1
24	NVH Foam Block, front bulkhead insert		NVH pack MY16	**A138B0693F**	2
25	NVH Foam Block, 'A' pillar		NVH pack MY16	**A120B0208F**	2
26	NVH Foam Block, 'A' pillar lower		NVH pack MY16	**A138V0432F**	1
27	NVH Fleece, front bulkhead upper LHD		NVH pack MY16	**A138V4341F**	1
27a	NVH Fleece, front bulkhead upper RHD		NVH pack MY16	**A138V4342F**	1

Function Code 16.01 Passenger Compartment Sound Insulation

Dep	Part Description	Remarks	Option	Part Number	Qty
28	NVH Foam, door card			**A138U0245F**	2

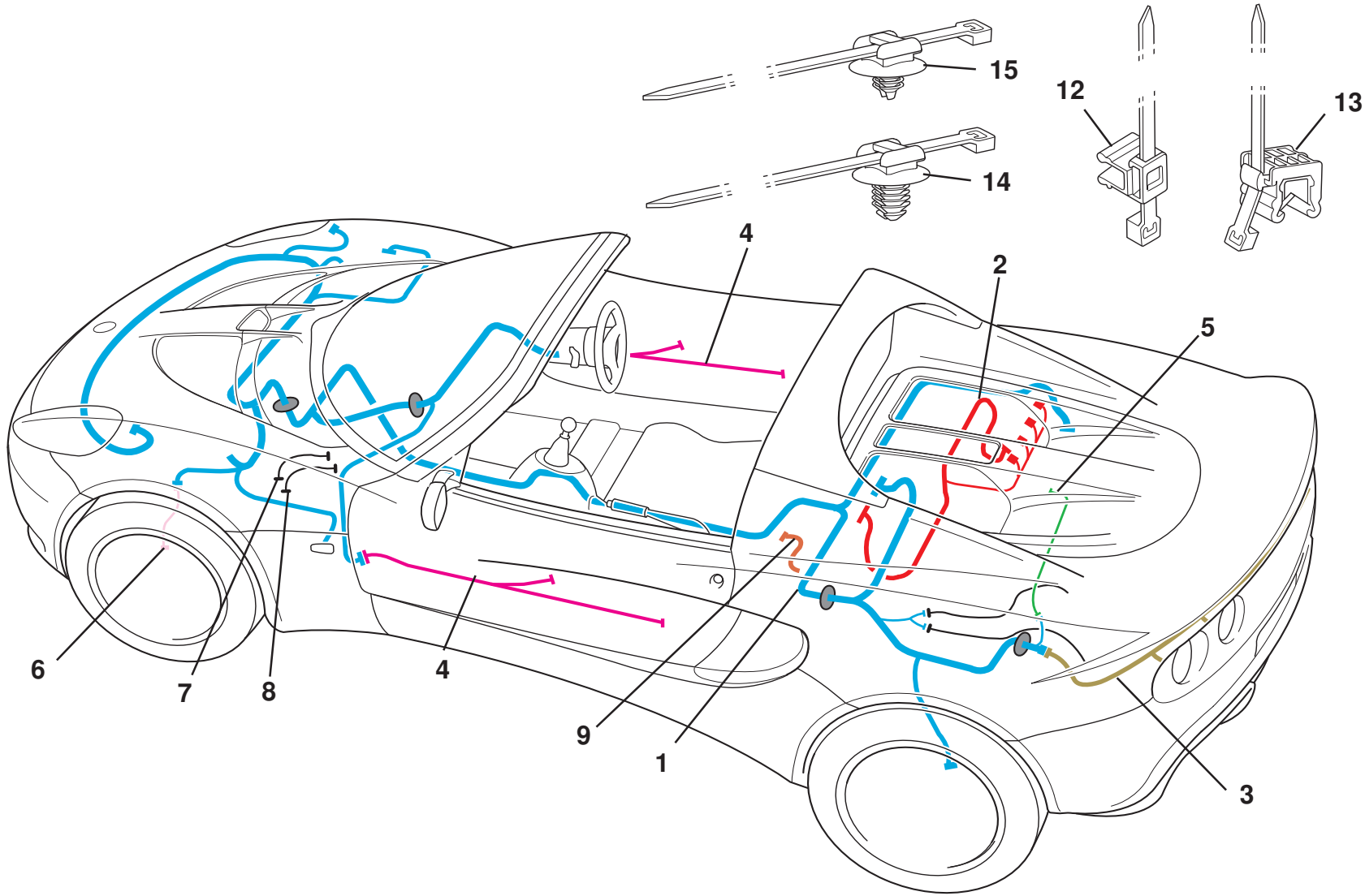

ELISE

17.01

Updated 2nd May 2017

Function Code 17.01 Harnesses, Leads

Dep	Part Description	Remarks	Option	Part Number	Qty
01	Harness, main, Elise with 1ZR FAE 1.6 engine	Kelsey Hayes ABS		**A121M0054F**	1
01a	Harness, main, Elise with 1ZR, 2ZR	Bosch, ABS from vin BH_10931		**F121M0064F**	1
01b	Harness, main, Elise with 1ZR, 2ZR	Gemini Alarm, Exige 350 type driver switches	17.5 MY up to Vin KH_10127	**A147M0001F**	1
01c	Harness, main, Elise with 2ZR	New airbag module	From Vin KH_10128	**C147M0001F**	1
02	Harness, engine, 1ZR FAE 1.6			**C121M0053F**	1
02a	Harness, engine, 2ZR FE			**B120M0065F**	1
02b	Harness, engine, 1ZR FAE 1.6	Gemini Alarm, Exige 350 type driver switches	17.5 MY	**A147M0002F**	1
02c	Harness, engine, 2ZR FE	Gemini Alarm, Exige 350 type driver switches	17.5 MY	**A147M0003F**	1
03	Harness, rear			**A120M0020F**	1
03a	Harness, rear		17.5 MY	**A138M0143F**	1
04	Harness, door		CDL/electric windows	**E117M0118F**	2
05	Harness, boot switch			**A120M0023F**	1
06	Lead Extension, wheel speed sensor		1ZR, 2ZR Bosch, ABS from Vin BH_10931	**A120M6046F**	4
06a	Edge Clip, cable tie, frt wheel sensor lead to rad surround	Not illustrated	1ZR, 2ZR Bosch, ABS from Vin BH_10931	**A120W6900F**	2
07	Cable, CDL power up (negative)	Front services compartment		**B122M0012F**	1
08	Cable, CDL power up (positive)	Front services compartment		**B122M0011F**	1

Function Code 17.01 Harnesses, Leads

Dep	Part Description	Remarks	Option	Part Number	Qty
09	Harness, fuel pump	Not illustrated		**A120M6009S**	1
09a	Harness, fuel pump	Not illustrated	12 MY Elise S	**A120L0076H**	1
09b	Harness, fuel pump, with fuel pump relay		17.5 MY	**A147M0004F**	1
09c	Harness, fuel pump, without fuel pump relay		17.5 MY	**A147M0011F**	1
10	Butt Connector, ECM harness repair	Not illustrated	Service only	**A120M6036S**	1
11	Harness, tilt sensor	Not illustrated	Dutch market	**A132M6119F**	1
12	Edge Clip Cable Tie, top fixing*	3 used on item 01j, 1 used on item 02d		**A126W6894F**	4
13	Edge Clip Cable Tie, side fixing*	1 used on item 02c, 1 used on item 02d		**A120W6900F**	2
14	Fir Tree Cable Tie*	23 used on item 01j, 3 used on item 02d, 6 used on item 04		**A116K6020F**	32
15	Fir Tree Cable Tie*	3 used on item 02d			3
		*See LSL626			

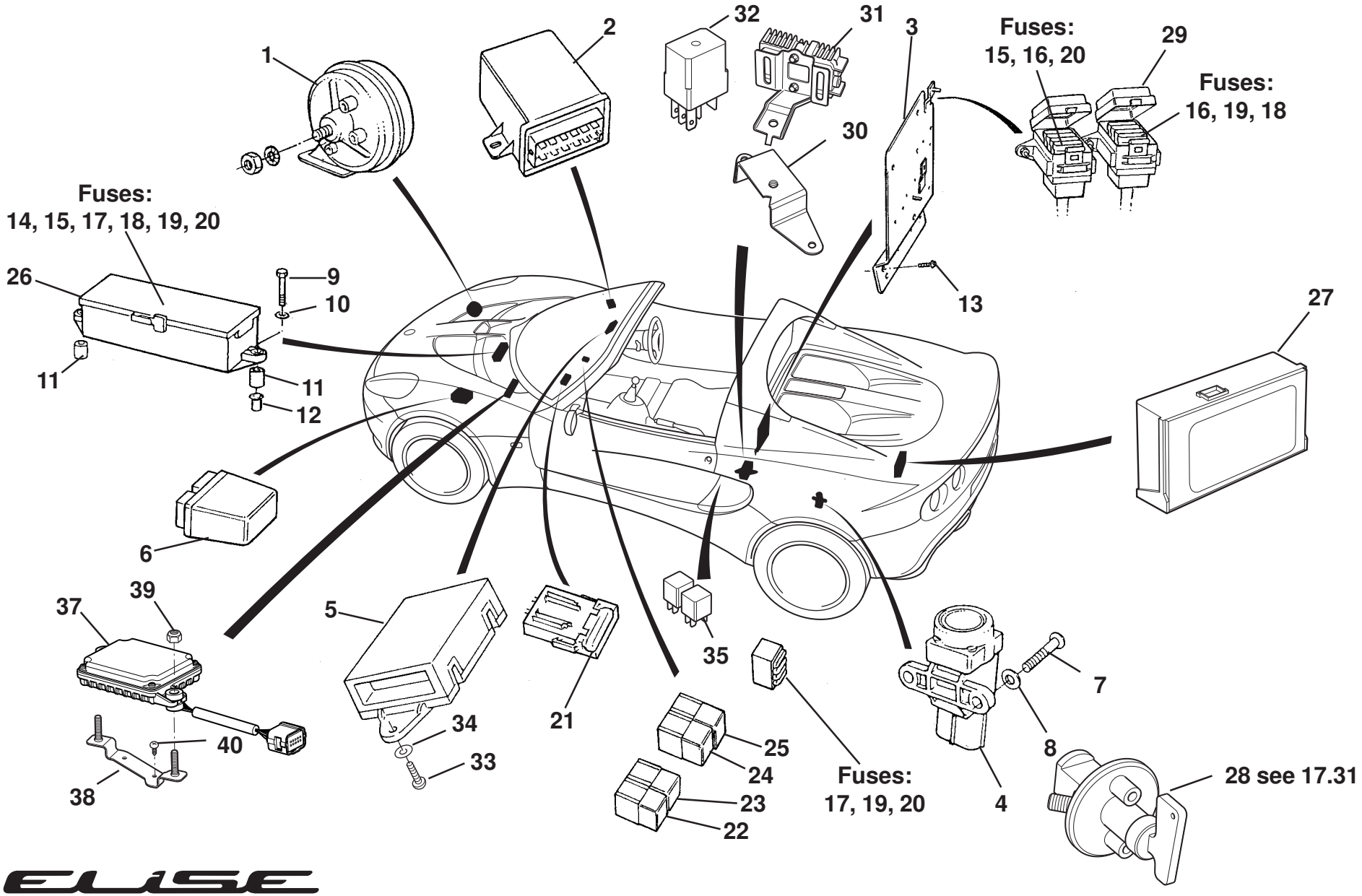

ELISE

17.03

Updated 3rd April 2017

Function Code 17.03 Horn, Inertia Switch, Modules, Fuses & Relays

Dep	Part Description	Remarks	Option	Part Number	Qty
01	Horn 'Low ' Note			**A100M6031F**	1
01a	Horn 'Hi ' Note			**A120B6076F**	1
02	Module, central door locking, PFK			**A132M0118F**	1
03	Mounting Plate, ECM/electrical components			**A120M0027F**	1
03a	Mounting Plate, ECM/electrical components		2ZR	**B121M0052F**	1
04	Inertia switch			**A082M6598F**	1
05	Switch Controller			**D117M0008F**	1
06	Fan Control Module			**B117M0038F**	1
06a	Bracket, fan module retention	Not illustrated		**A117M0106F**	1
07	Screw, M5 x 16, pan hd. pozi.			**A082W5107F**	2
08	Washer, flat, M5 x 10 x 1.0			**A075W4011Z**	7
09	Screw, M5 x 16, button hd. fuse box fixing			**A116W5281F**	2
10	Washer flat, 3/16", S/S, fuse box fixing			**A075W4009Z**	2
11	Spacer, fuse box to wheelarch			**A111U0368F**	2
12	Rawlnut, M5, fuse box to wheelarch			**A075W6074F**	2
13	Screw, M6 x 16, flg. hd., plate to bulkhead			**A918W5208F**	2
14	Fuse, 2A, black	See Service Notes, section MP		**A082M6316F**	1
15	Fuse, 3A, violet	See Service Notes, section MP		**A082M6243F**	2

Function Code 17.03 Horn, Inertia Switch, Modules, Fuses & Relays

Dep	Part Description	Remarks	Option	Part Number	Qty
16	Fuse, 5A, orange	See Service Notes, section MP		**A082M6245F**	4
17	Fuse, 7.5A, brown	See Service Notes, section MP		**A082M6246F**	9
18	Fuse, 10A, red	See Service Notes, section MP		**A082M6247F**	7
19	Fuse, 15A, light blue	See Service Notes, section MP		**A082M6248F**	3
20	Fuse, 20A, yellow	See Service Notes, section MP		**A082M6249F**	7
21	Maxi Fuse, 60A, dark blue, ABS	See Service Notes, section MP			1
22	Module, wiper delay			**A082M6457F**	1
23a	Module, flasher unit	LED front indicators		**A120M0056F**	1
24	Relay Single Contact Changeover 30A	Inertia switch	CDL	**C079M6141F**	1
25	Relay, Horn			**C079M6141F**	1
26	Cover, fusebox			**A111M6115S**	1
27	Module, tyre pressure monitoring	Located on LH of front boot bulkhead	Option by market	**A121M6022F**	1
28	Switch, battery master		Elise Club Racer 11 MY	**A127M6001F**	1
29	Lid, engine bay fuse box			**A120M6052S**	2
30	Mounting Bracket, resistor		2ZR	**B120E0174F**	1
31	Fuel Pump Resistor		2ZR	**A120L6030F**	1
32	Relay, fuel pump	Incorperated into main harness	1ZR, 2ZR Bosch ABS	**A132M6002F**	1
33	Screw-M4 x 12 pan pozi			**A100W5143F**	2
34	Washer, flat, M4 x 9 x 0.8			**A082W4099F**	2
35	Relay Single Contact Changeover 30A			**C079M6141F**	2

Function Code 17.03 Horn, Inertia Switch, Modules, Fuses & Relays

Dep	Part Description	Remarks	Option	Part Number	Qty
36	Module, GCC over speed	Not illustrated	11 MY gulf states	**A120M6039F**	1
37	TPMS Module 434mhz		17.5 MY	**A132M0376F**	1
37a	TPMS Module 315mhz		17.5 MY Japan	**A132M0377F**	1
38	Bracket TPMS		17.5 MY	**A132M0418F**	1
39	Nut Nyloc M6 thin, tpms module			**A907E6285F**	2
40	Screw M4 x 12, pan pozi			**A075W5132F**	2

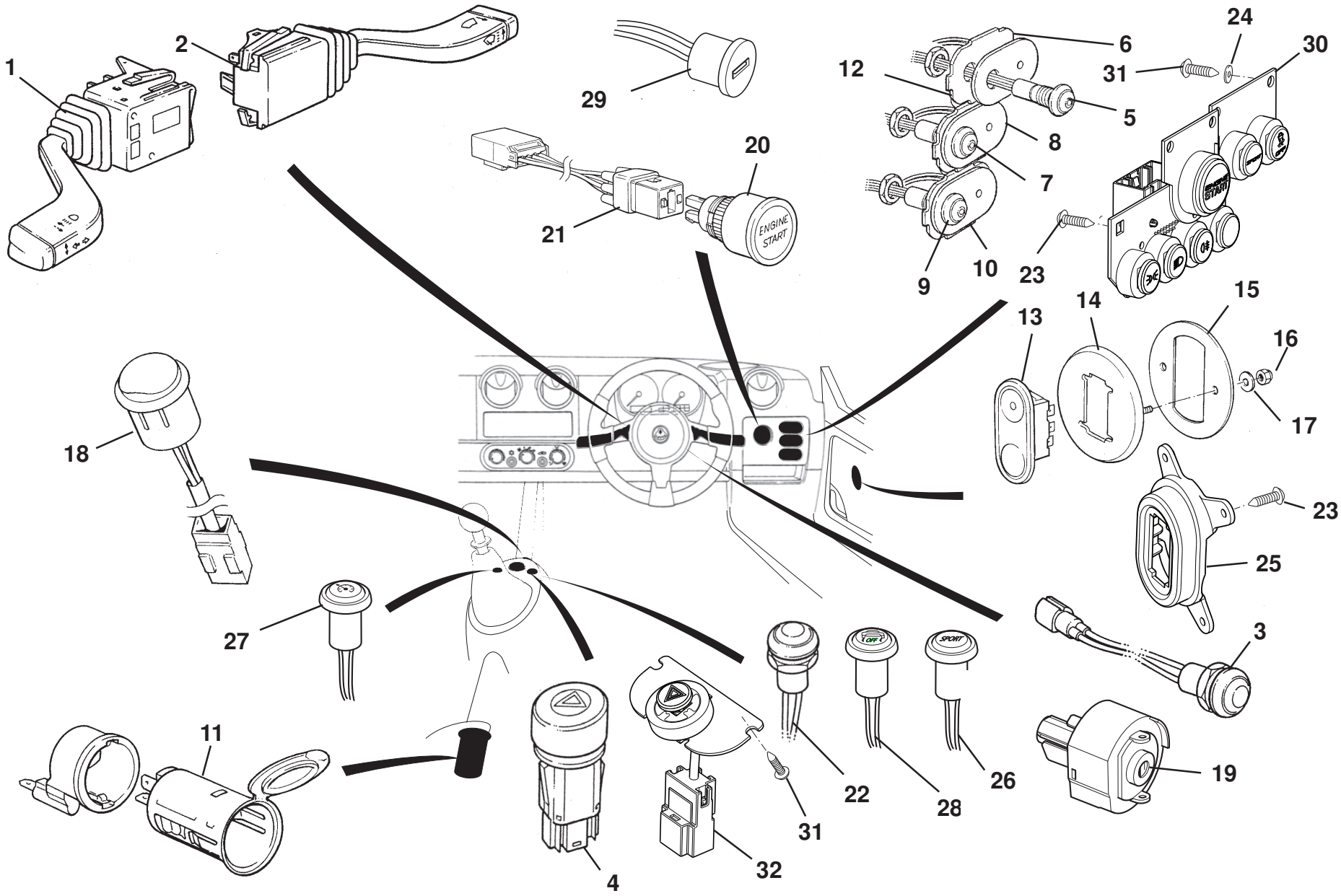

ELISE

17.05

Updated 3rd April 2017

Function Code 17.05 Interior Switches, Auxiliary Power Socket

Dep	Part Description	Remarks	Option	Part Number	Qty
01	Column Switch, LH, indicators/dip/flash			**A100M6048F**	1
01a	Column Switch, LH, indicators/dip/flash		Cruise control	**A126M6010F**	1
02	Column Switch, RH, windscreen wipe/wash			**A100M6049F**	1
03	Switch, panel light dimmer/trip reset			**B117M0048F**	1
04	Switch, hazard			**A340M6016F**	1
05	Switch, sidelamps, green tell tale			**A117M0055F**	1
06	Decal, sidelamps graphic, RHD/LHD			**A117M0005F**	1
07	Switch, headlamps, green tell-tale			**A117M0055F**	1
08	Decal, headlamps graphic, RHD			**A117M0006F**	1
08a	Decal, headlamps graphic, LHD			**A117M0045F**	1
09	Switch, rear fog lamp, yellow tell-tale			**A117M0056F**	1
10	Decal, rear fog lamp graphic, RHD			**A117M0007F**	1
10a	Decal, rear fog lamp graphic, LHD			**A117M0046F**	1
11	Auxiliary Power Socket			**A117M6024F**	1
12	Switch Panel Backlight Assembly, orange	Three linked illumination panels		**A117M0125F**	1
13	Switch, window lift			**A117M6064F**	2
14	Bezel, switch to door trim	Includes studs		**A117U0344J**	2
15	Backplate, switch bezel			**A117U0345K**	2

Function Code 17.05 Interior Switches, Auxiliary Power Socket

Dep	Part Description	Remarks	Option	Part Number	Qty
16	Nyloc Nut, M4, backplate to trim panel			**A075W3049Z**	4
17	Washer, flat, M4 x 9, backplate to trim panel			**A082W4099F**	4
18	Switch, central door locking			**A117M0124F**	1
18a	Blanking Grommet, CDL switch aperture	Not illustrated	Non CDL	**A116W6714F**	1
19	Ignition Switch	Part of upper steering column		**A111M6108S**	1
20	Starter Button,			**A121M0026S**	1
20a	Switch/harness-engine starter			**B121M0018F**	1
21	Microswitch/Harness Assy., engine start			**A121M0027S**	1
22	Switch, traction control	For decal see 12.05	1ZR prior to vin BH_ 10931	**A120M0031F**	1
23	Screw Self Tap, no. 6 flg pozi, switch retaining			**A075W5019Z**	10
24	Washer Retaining M4 , nylon			**A138W4005F**	4
25	Bezel, window lift switch LH			**A138V4333F**	1
25a	Bezel, window lift switch RH			**A138V4334F**	1
26	Switch, sport	Lotus DPM	Bosch, 1ZR, 2ZR	**A120M0064F**	1
27	Lamp Warning, cruise control	1ZR with cruise control (Kelsey Hayes ABS unit)	11MY prior to vin BH_ 10931	**A121M0058F**	1
28	Switch, traction control and ESC		1ZR Bosch, ABS from vin BH_10931,2ZR	**A120M0059F**	1
29	USB Charging Port			**B120M0077F**	1
30	Switch Panel, driver			**A120M0107F**	1
31	Screw, M3 x 8, flg. pozi. hd. S/T, switch retaining			**A132W5020F**	8

Function Code 17.05 Interior Switches, Auxiliary Power Socket

Dep	Part Description	Remarks	Option	Part Number	Qty
32	Switch, hazard	Exposed gear shift		**A138M0102F**	1

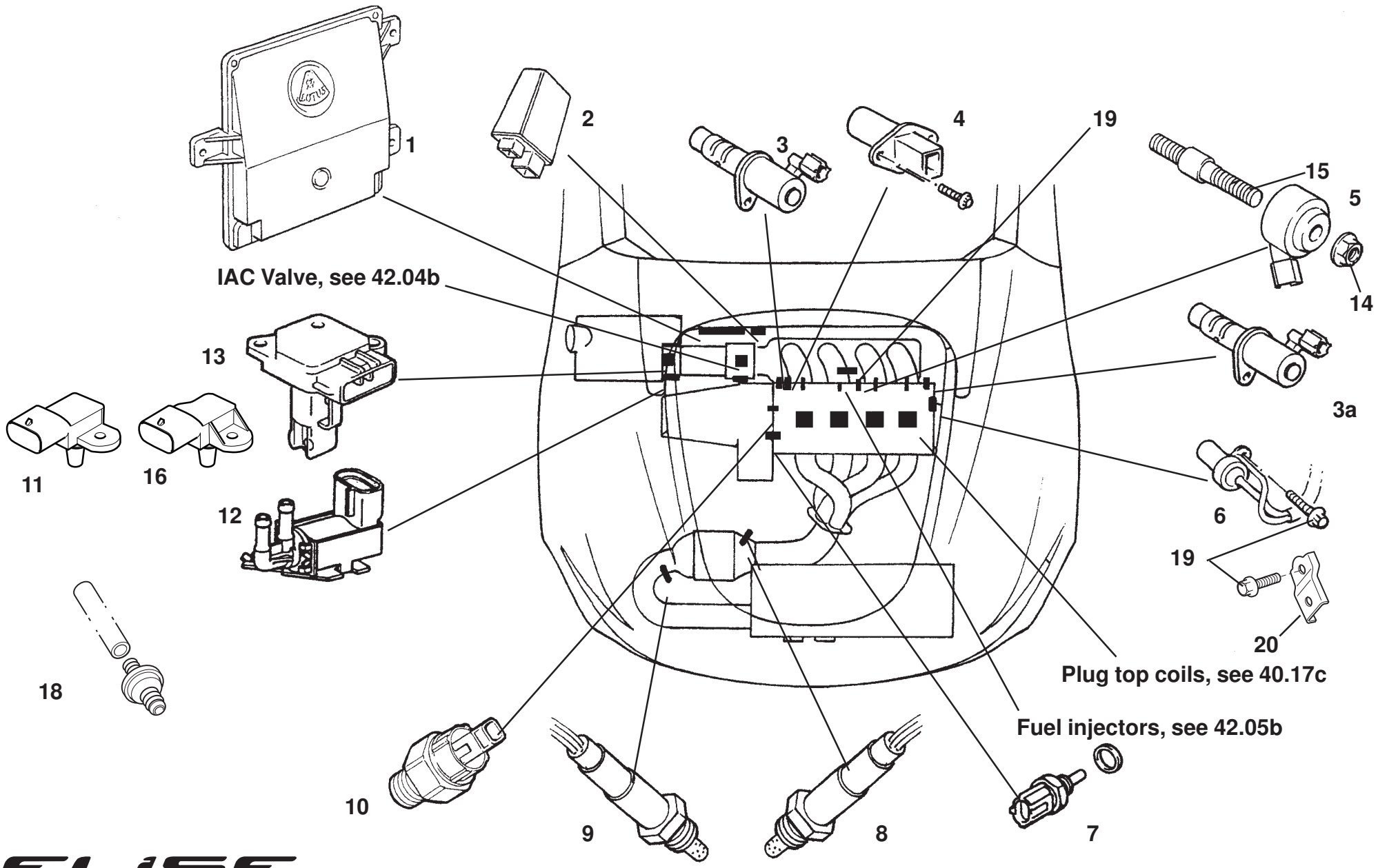
1
2
3
4
19
15
5
14
IAC Valve, see 42.04b
13
3a
11
16
12
6
19
20
18
Plug top coils, see 40.17c
Fuel injectors, see 42.05b
10
9
8
7

ELISE

17.06

Function Code 17.06 Engine Management & Sensors

Dep	Part Description	Remarks	Option	Part Number	Qty
01	Electronic Control Module (ECM) T6 uncalibrated	Dealer programmed, also refer to TSB 2012/17	1ZR, 2ZR	**B132E0008F**	1
02	Multi Function Relay Unit		Common	**A111M6024F**	1
03	Oil Control Valve, variable valve timing, No1 inlet	Also see 40.07e	1ZR, 2ZR	**A120E7163S**	1
03a	Oil Control Valve, variable valve timing, No1 exhaust	Also see 40.07e	1ZR, 2ZR	**A120E7164S**	1
04	Sensor, camshaft position	Also see 40.07e	1ZR, 2ZR	**A132E6283S**	1
05	Sensor, knock control		1ZR, 2ZR	**A132E6298S**	1
06	Sensor, crankshaft position	Also see 40.01d	1ZR, 2ZR	**A120E7268S**	1
07	Sensor, engine coolant temperature		1ZR, 2ZR	**A132E6258S**	1
07a	Gasket, coolant temperature sensor		1ZR, 2ZR	**A120E6378S**	1
08	Sensor, oxygen, 1, pre-catalyst		Common	**A117E6007F**	1
09	Sensor, oxygen, 2, post-catalyst		Common	**A117E6007F**	1
10	Sensor, oil pressure,		1ZR, 2ZR	**A132E6297S**	1
11	Sensor vacuum		1ZR	**A120E7224S**	1
12	Valve, vacuum switching, airbox flap valve	On airbox	2ZR	**A120E6443S**	1
12a	Valve, vacuum switching	See 43.03 for 1ZR system	1ZR,	**A120E7262S**	1
13	Sensor, mass air flow	On airbox	2ZR	**A120E6299S**	1
13a	Meter, air intake flow	On airbox	1ZR	**A132E6482S**	1
14	Nut, flg., sensor retaining		Common	**A120E6355S**	1

Function Code 17.06 Engine Management & Sensors

Dep	Part Description	Remarks	Option	Part Number	Qty
15	Stud, sensor retaining		Common	**A120E6478S**	1
16	T Map Sensor		2ZR	**A116E6063F**	1
17	Cable Clip, 02 sensor harness to subframe	Not illustrated	Common	**A079W6185F**	4
18a	One Way Valve, flap valve vac. Hose	See 43.03 for 1ZR system	1ZR, 2ZR	**A131J0001F**	1
19	Bolt, sensor			**A120E6349S**	2
20	Clamp			**A120E6344S**	1

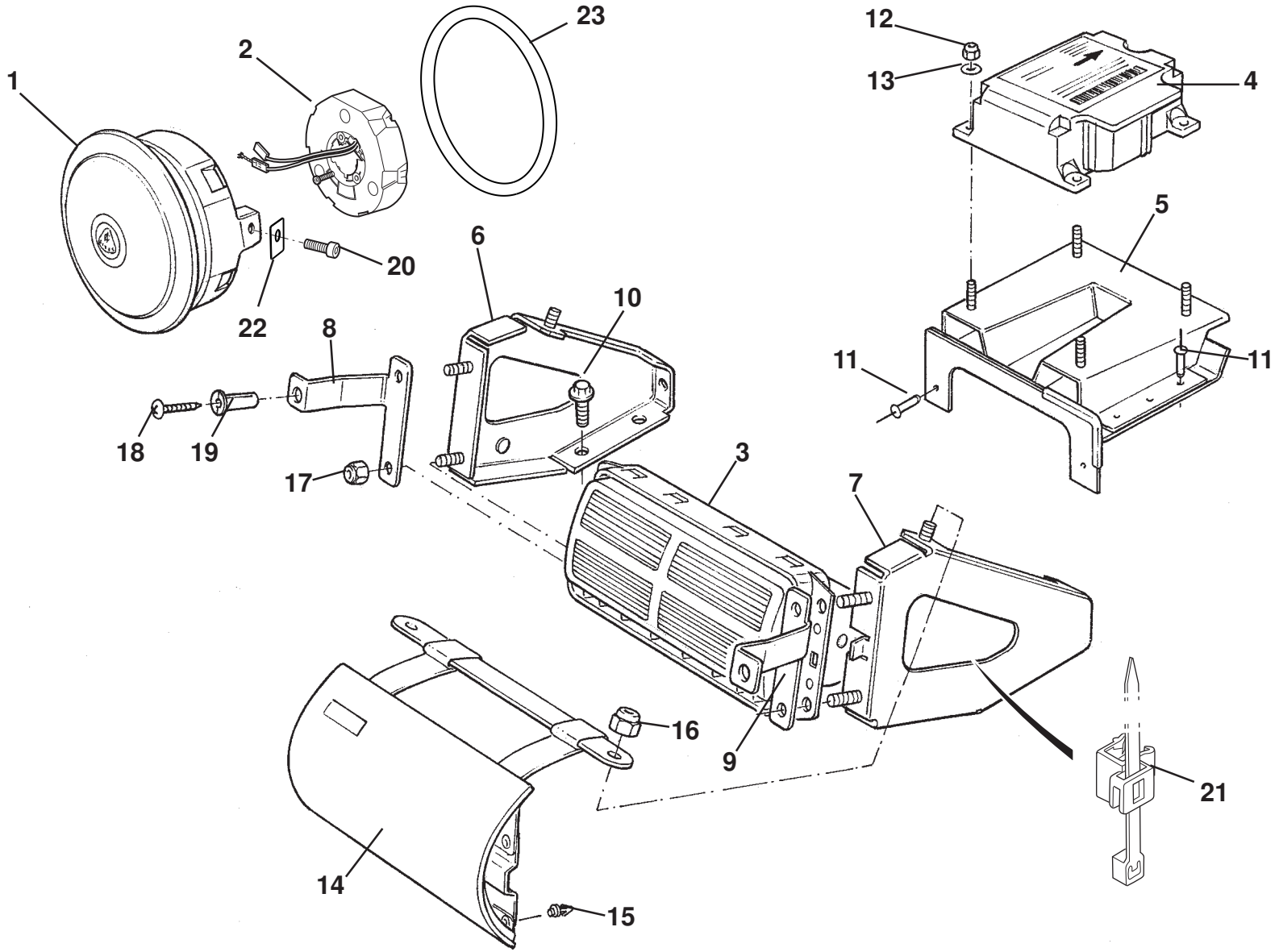

ELISE

17.06b

Updated 4th September2017

Function Code 17.06b SIR Inflator Modules

Dep	Part Description	Remarks	Option	Part Number	Qty
01	Airbag Assembly, driver	Includes Lotus badge		**A121U0047F**	1
02	Rotary Contact Unit, SIR wheel	P/O wheel assy., see 32.05		**A120M6010S**	1
03	Airbag Unit, passenger			**A121U6066F**	1
04	SRS Unit		Up to vin KH_10127	**A121B0060F**	1
04a	SRS Unit		From vin KH_10128	**A138M0195F**	1
05	Mounting Bracket, SRS unit		Up to vin KH_10127	**B121U0095F**	1
05a	Mounting Bracket Assembly, SRS unit		From vin KH_10128	**A138M0196F**	1
06	Mounting Bracket, passenger airbag, LH			**A121U0065F**	1
07	Mounting Bracket, passenger airbag, RH			**A121U0066F**	1
08	Mounting Bracket, passenger airbag/rail, LH			**B121U0069F**	1
09	Mounting Bracket, passenger airbag/rail, RH			**B121U0070F**	1
10	Bolt, M8 x 20, flg. hex. hd., bracket to chassis			**A120W5278F**	4
11	Pop Rivet, bracket to chassis			**A100W6037F**	8
12	Nyloc Nut, M6, SRS unit to bracket			**A075W3009Z**	4
13	Washer, flat, M6 x 12.5 x 1.6, SRS unit to bracket			**A100W6307F**	4
14a	Cover Assembly, passenger airbag, senosoft, charcoal	Also see 14.05b		**A121U0176F**	1
14c	Cover Assembly, passenger airbag, senosoft, black	Also see 14.05b	MY12	**A138V0151F**	1
14d	Cover Assembly, passenger airbag, suedetex	Also see 14.05b	Club Racer, S Clubracer		1

Function Code 17.06b SIR Inflator Modules

Dep	Part Description	Remarks	Option	Part Number	Qty
15	Clip, cover to dash panel			**B121U0117F**	4
16	Nyloc Nut, M8, cover strap bar to bracket			**A075W3010Z**	2
17	Nyloc Nut, M6, PAB to mounting brackets			**A075W3009Z**	4
18	Screw, self tap., No. 8 x 3/4" bracket to dash panel			**A075W5074Z**	2
19	Captive Nut, bracket to dash panel			**A120W3186F**	2
20	Screw M6 x 10 skt cap hd			**A111W7151F**	2
21	Edge Clip Cable Tie, side fixing			**A126W6896F**	1
22	Spacer Driver Airbag			**A120V0677F**	2
23	Neoprene Cord 8mm			**A120V6049V**	1

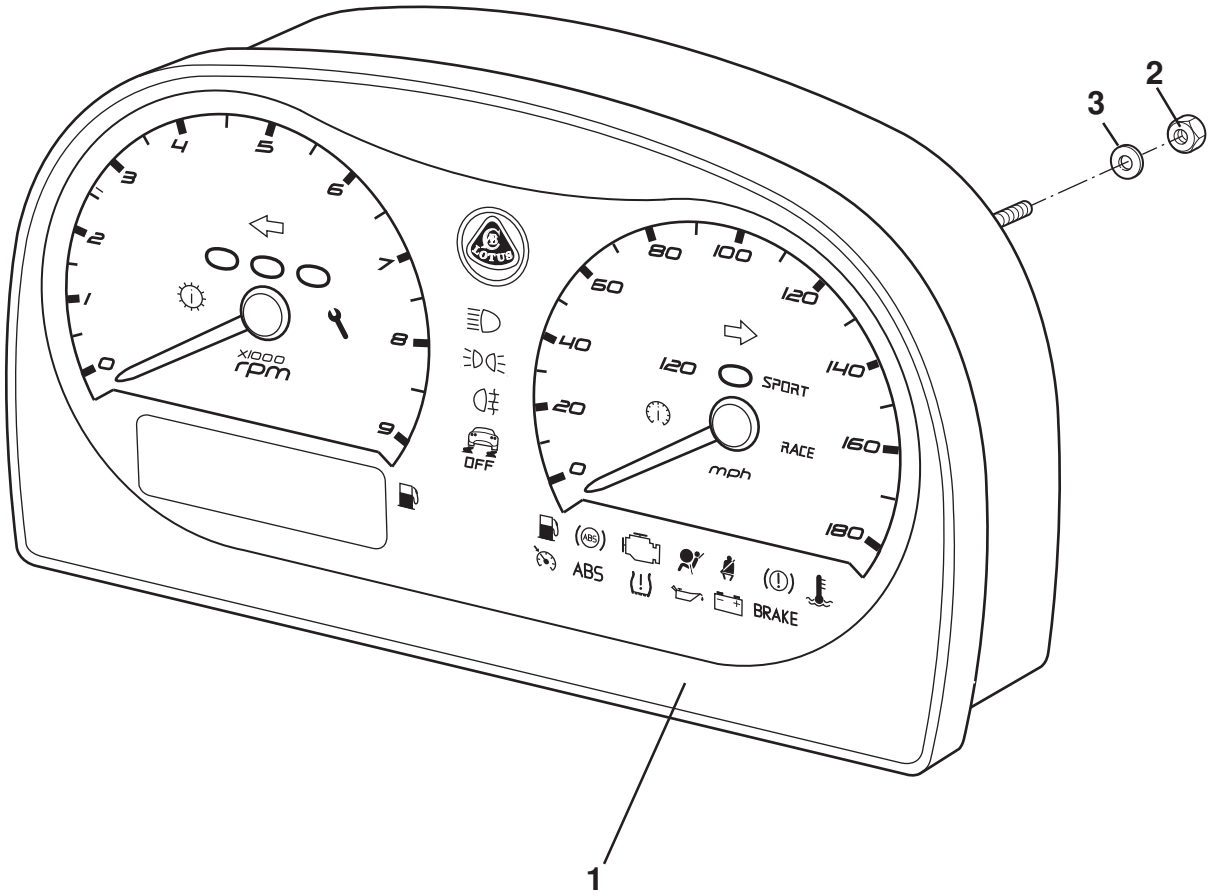

ELISE

17.07

Function Code 17.07 Instruments, Tell Tales, & Displays

Dep	Part Description	Remarks	Option	Part Number	Qty
01	Instrument Pack, MPH	Grey dials.	12 MY - 17.5 MY	**A138N0002F**	1
01a	Instrument Pack, Km/h	Grey dials.	12 MY - 17.5 MY	**A138N0001F**	1
1b	Instrument Pack, MPH	Black dials.	11 MY only	**A121N0007F**	1
1c	Instrument Pack, Km/h	Black dials.	11 MY only	**A121N0008F**	1
01c	Instrument Pack, Km/h	Black dials.	17.5 MY	**A147N0001F**	1
01d	Instrument Pack, MPH	Black dials.	17.5 MY	**A147N0002F**	1
02	Nut, M4, pack to brackets	Also see 14.10		**A075W3019F**	4
03	Washer, flat, M4	Also see 14.10		**A082W4099F**	4

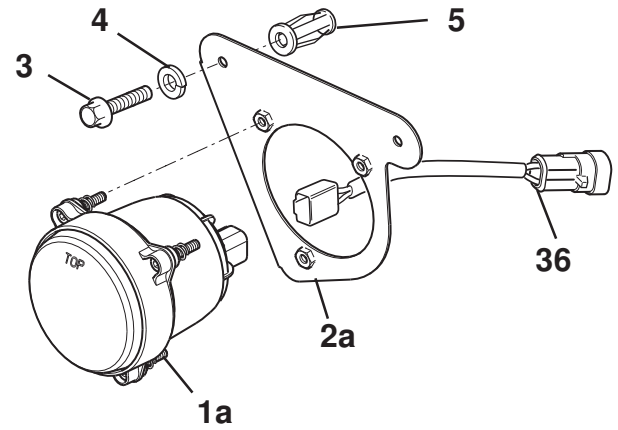

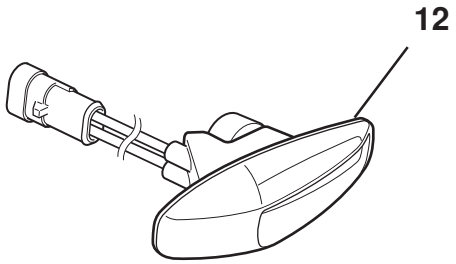

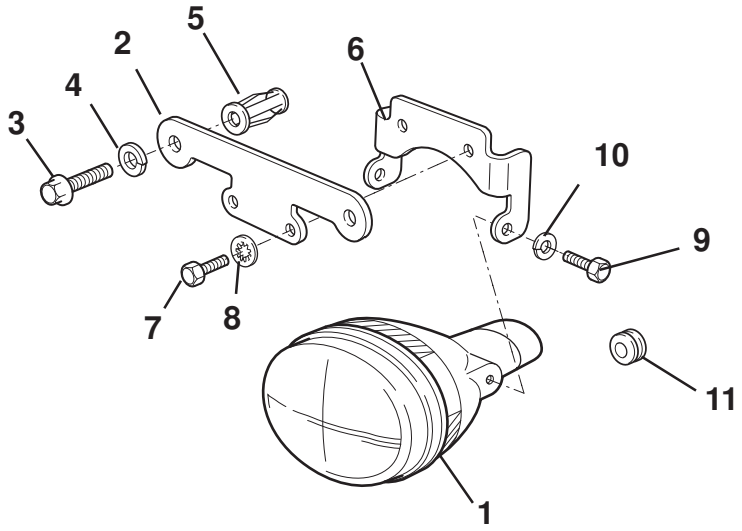

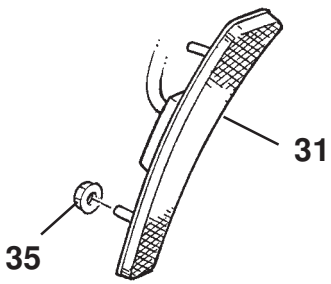

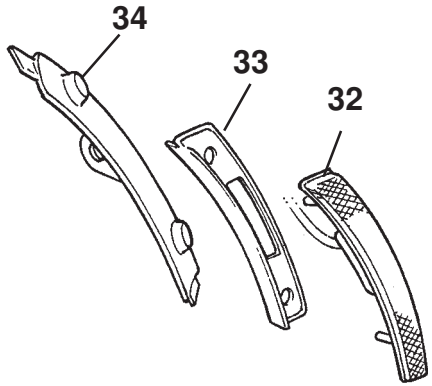

ELISE

17.11a page1

Updated 3rd April 2017

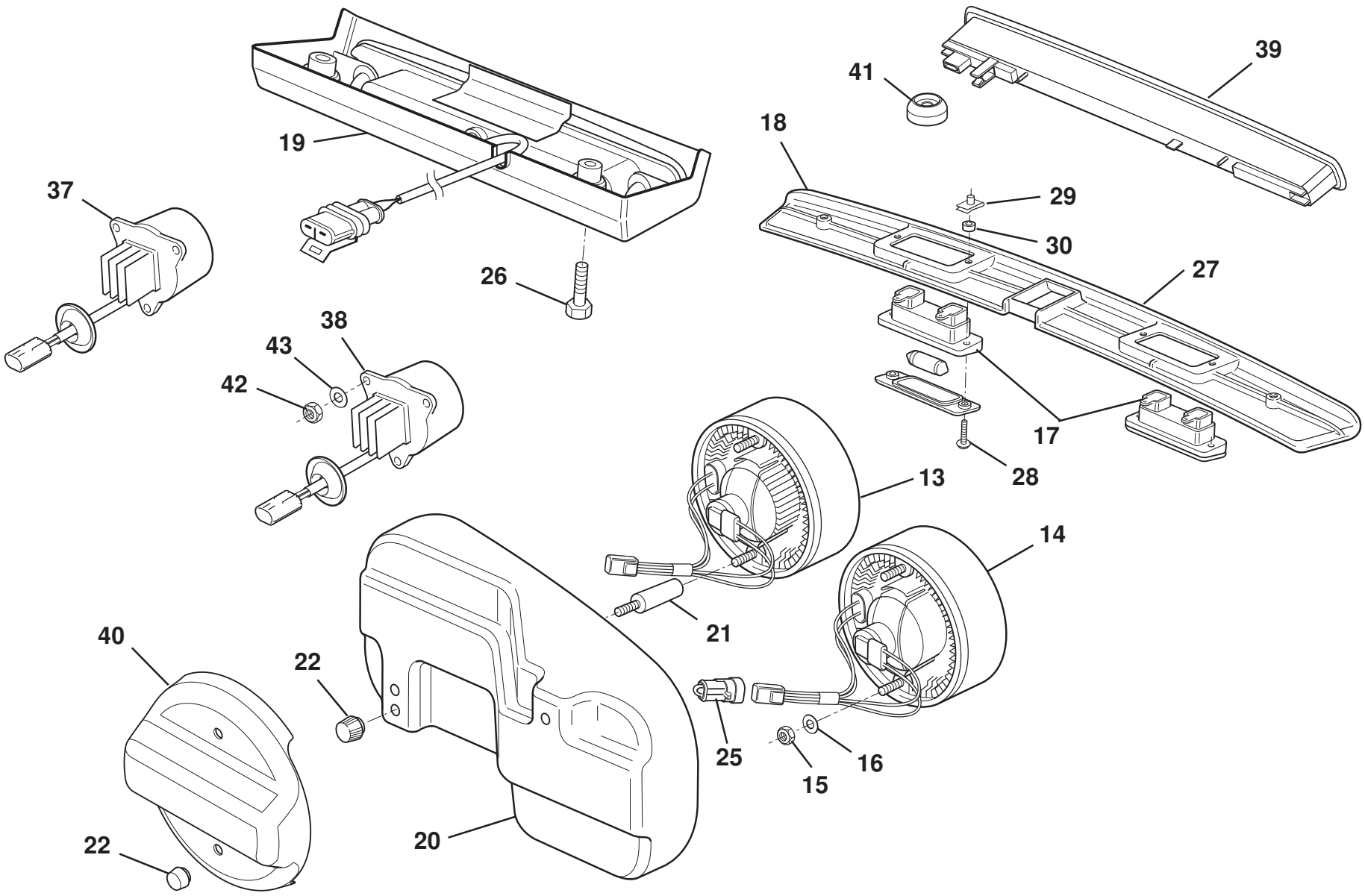

ELISE

17.11a page2

Updated 3rd April 2017

Function Code 17.11a Exterior Lamps, Except Headlamps, Elise 2011 MY

Dep	Part Description	Remarks	Option	Part Number	Qty
01	Driving Lamp, eleptical lens, 80mm wide	Crash structure mounted		**A340M6005F**	2
01a	Driving Lamp, round lens	Crash structure mounted		**A120M6060F**	2
02	Bracket, driving lamp mounting to crash structure			**A117M0074F**	2
02a	Bracket, driving lamp to crash structure LH			**A120M4013F**	1
02b	Bracket, driving lamp to crash structure RH			**A120M4014F**	1
03	Screw, M6 x 20, hex. flg. hd., bracket to crash structure	Black finish		**A082W5206F**	4
04	Washer, spring, M6, bracket to crash structure			**A075W4035Z**	4
05	Jacknut, M6, bracket to crash structure			**A075W3031Z**	4
06	Bracket, driving lamp to crash structure bracket			**A117M0075F**	2
07	Screw, M4 x 10, hex. hd., brkt. to crash structure brkt.			**A100W1100F**	4
08	Washer, shakeproof, M5, brkt. to crash structure brkt.			**A075W4086F**	4
09	Screw, M5 x 8, hex. hd., bracket to lamp			**A117W1173F**	4
10	Washer, spring, M5, bracket to lamp			**A082W4097F**	4
11	Grommet, driving lamp leads thro' body			**A075U6043Z**	2
12	Side Repeater, LH			**A120M4005F**	1
12a	Side Repeater, RH			**A120M4006F**	1
13	Lamp, inner, rear fog, reverse, LED	Incl. bulb holders & harness, Grey body moulding	Euro	**B120M0035F**	2

Function Code 17.11a Exterior Lamps, Except Headlamps, Elise 2011 MY

Dep	Part Description	Remarks	Option	Part Number	Qty
14	Lamp, outer, tail. turn, stop/tail, LED	Incl. bulb holders & harness, Grey body moulding	Euro	**C120M0034F**	2
15	Nyloc Nut, M5, lamp to body			**A075W3008Z**	8
16	Washer, flat, M5 x 18 x 1.5 S/S, lamp to body			**B075W4009Z**	8
17	Lamp, license plate			**A117M6028F**	2
18	Bulb, 12v 5w, license plate			**A083M6292F**	2
19	Lamp, CHMSL/housing assembly	Mounted above rear window		**C121M0013F**	1
20	Cover, rear lamp			**A120B4021K**	2
21	Extender, M5 x 25, nut to lamp stud			**A120B6058F**	4
22	Knurled Nut, M5, plastic, cover retaining			**A120B6059F**	4
23	Bulb,12v 21w, reverse	Not illustrated		**A120M6029S**	2
24	Bulb, 12v 21w, direction indicator	Not illustrated		**A120M6029S**	2
25	Link Harness		USA	**A121M0068F**	1
26	Screw, M5 x 30, hex hd., housing to bulkhead			**A079W1084F**	2
27	Finisher, license plate lamps	On clamshells without lamp mtg brkts		**D132U0400F**	1
28	Screw -No6 x 1" S/T Flg Pozi			**A082W5022F**	4
29	Spire Nut No.6			**A075W6014Z**	4
30	Nylon Spacer			**A117W6721F**	4
31	Lamp, side marker, front, LH		USA/Canada	**A121M0009F**	1
31a	Lamp, side marker, front, RH		USA/Canada	**A121M0008F**	1

Function Code 17.11a Exterior Lamps, Except Headlamps, Elise 2011 MY

Dep	Part Description	Remarks	Option	Part Number	Qty
32	Lamp, side marker, rear, LH		USA/Canada	**A121M0011F**	1
32a	Lamp, side marker, rear, RH		USA/Canada	**A121M0010F**	1
33	Plinth, side marker lamp, rear, LH		USA/Canada	**A121B0043F**	1
33a	Plinth, side marker lamp, rear, RH		USA/Canada	**A121B0042F**	1
34	Cover, sidemarker harness, rear, LH		USA/Canada	**B121B0027F**	1
34a	Cover, sidemarker harness, rear, RH		USA/Canada	**B121B0028F**	1
35	Nut, self threading, lamp to body		USA/Canada	**A121W3185F**	8
36	Link Harness, driving lamp			**A120M0091F**	2
37	Lamp Reverse		17.5 MY	**B132M0351F**	1
38	Lamp Fog		17.5 MY	**B132M0350F**	1
39	Lamp, CHMSL		17.5 MY	**A138M6000F**	1
40	Cover, rear lamp		17.5 MY	**B147B0038F**	2
41	Grommet		17.5 MY	**A124W6790F**	1
42	Nut Nyloc M4			**A132W3019F**	4
43	Washer M4 x 9 x0.8			**A100W4120F**	4

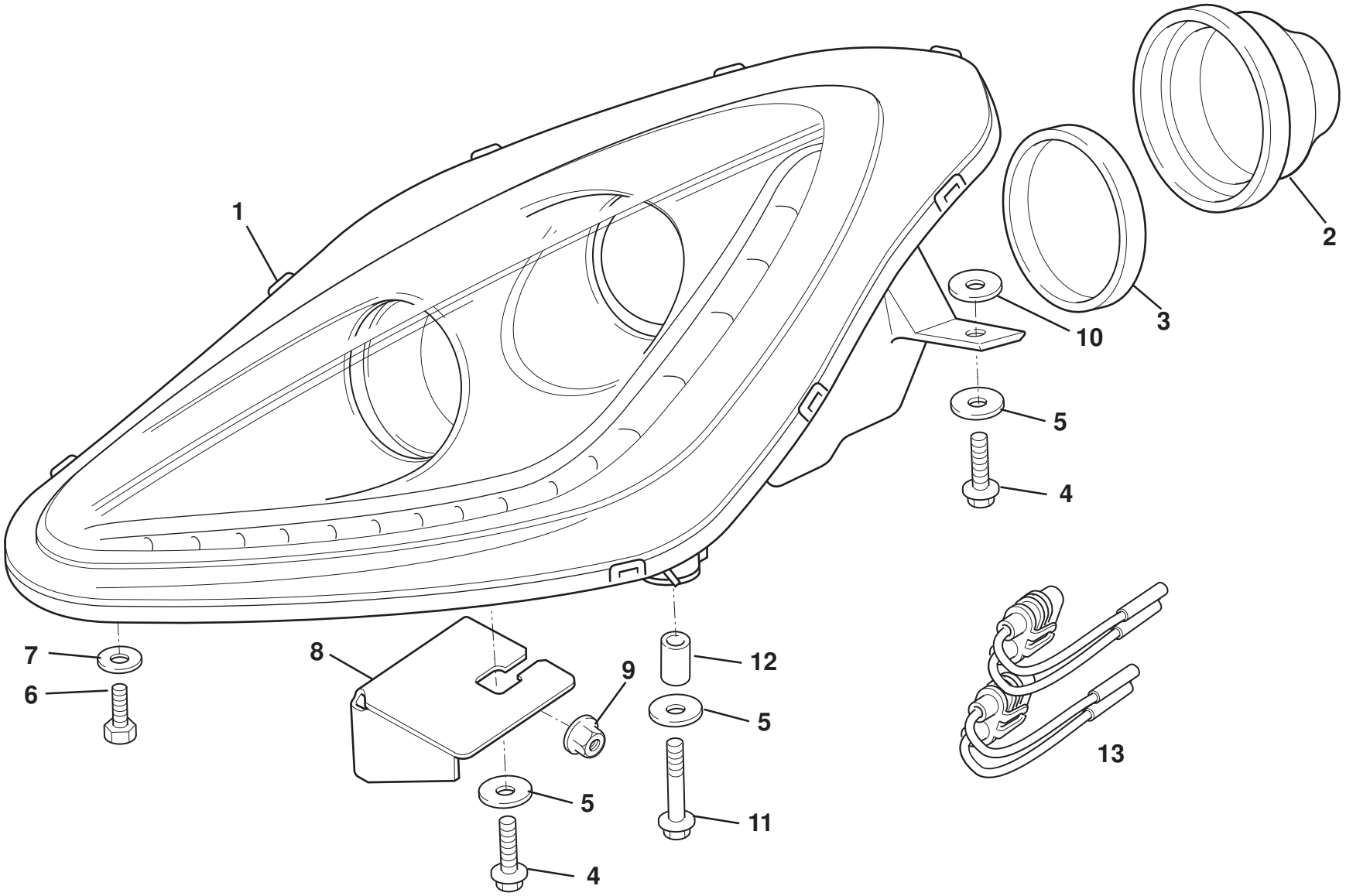

ELISE

17.13a

Function Code 17.13a Headlamps, Elise 2011 MY

Dep	Part Description	Remarks	Option	Part Number	Qty
01	Headlamp Assembly, LH, RHD, white led	Includes eyebow over projector lenslens	From approx june 2018	**C120M4001F**	1
01a	Headlamp Assembly, LH, RHD, yellow led	Includes eyebow over projector lens		**A120M4015S**	1
01b	Headlamp Assembly, RH, RHD, white led	Includes eyebow over projector lenslens	From approx june 2018	**C120M4002F**	1
01c	Headlamp Assembly, RH, RHD, yellow led	Includes eyebow over projector lens		**A120M4016S**	1
01d	Headlamp Assembly, LH, LHD, white led	Includes eyebow over projector lens lens	Except USA/Canada, From approx june 2018	**C120M4003F**	1
01e	Headlamp Assembly, LH, LHD, yellow led	Includes eyebow over projector lens		**A120M4017S**	1
01f	Headlamp Assembly, RH, LHD, white led	Includes eyebow over projector lenslens	Except USA/Canada, From approx june 2018	**C120M4004F**	1
01g	Headlamp Assembly, RH, LHD, yellow led	Includes eyebow over projector lens		**A120M4018S**	1
01h	Headlamp Assembly, LH, LHD, Federal	B level includes eyebow over projector lens	USA/Canada	**B121M4001F**	1
01i	Headlamp Assembly. RH, LHD, Federal	B level includes eyebow over projector lens	USA/Canada	**B121M4002F**	1
02	Access Cover, rubber, upper, dipped bulb	Part not available separately			2
03	Access Cover, rubber, lower, main bulb	Part not available separately			2
04	Bolt M6 x 14 hex flg, lamp retention			**A116W5233F**	2

Function Code 17.13a Headlamps, Elise 2011 MY

Dep	Part Description	Remarks	Option	Part Number	Qty
05	Washer Flat M6 x 25 x 1.4, lamp retention			**B075W4017Z**	3
06	Screw M6 x 12 hex flg, lamp retention			**A075W1027Z**	1
07	Washer Flat M6 x 18 x 1, lamp retention			**B082W4018F**	4
08	Headlamp Bracket LH			**A120B4089F**	1
08a	Headlamp Bracket RH			**A120B4090F**	1
09	Nut M6 hex flg			**A117W3180F**	4
10	Shim 9 x 28 x 3			**A124B0255F**	1
10a	Shim 9 x 28 x 1 C type			**B124B0257F**	3
11	Bolt M6 x 40 hex flg			**A132W2019F**	1
12	Spacer, lamp mounting			**A120B0390F**	1
13	Headlamp Repair Kit	Supplied as a pair for both headlamps see LSL642		**A120M0106F**	1

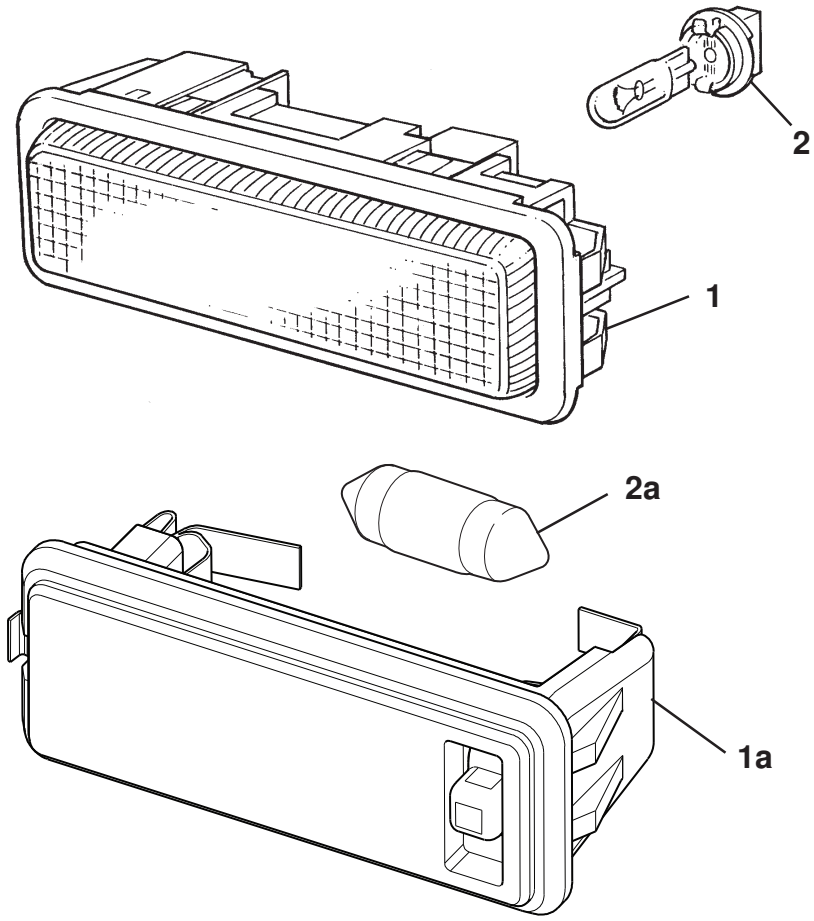
2
1
2a
1a

Function Code 17.17 Interior Lamps

Dep	Part Description	Remarks	Option	Part Number	Qty
01	Interior Lamp			**A082M6644F**	1
01a	Interior Lamp led			**A120M0094F**	1
02	Bulb, interior lamp, 5W	Part of bulb & fuse kit		**LOTAC05345**	1
02a	Led Bulb			**A120M0105F**	1

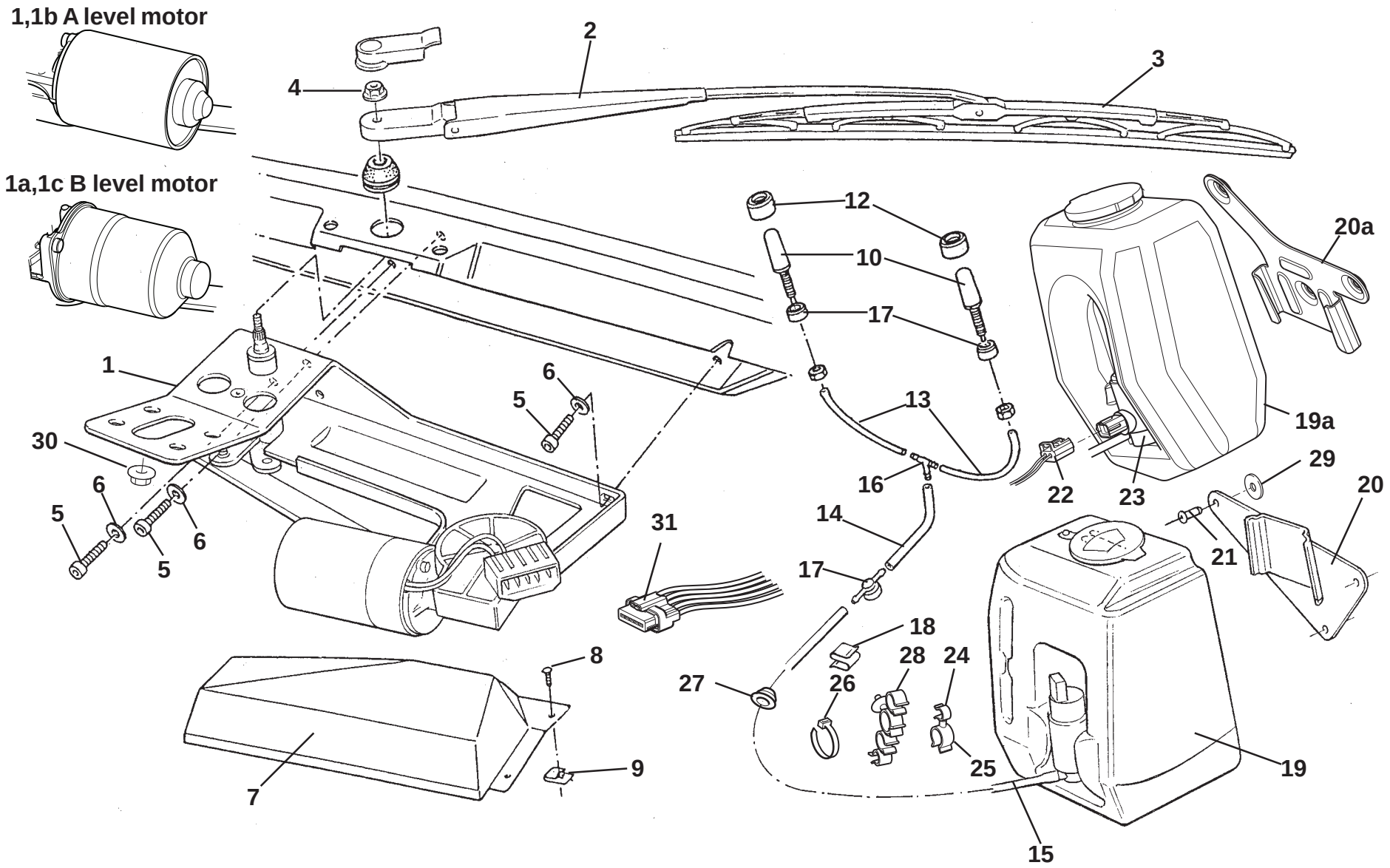

ELISE

17.21

Updated 1st October 2018

Function Code 17.21 Windscreen Wiper Motor, Wipers & Washers

Dep	Part Description	Remarks	Option	Part Number	Qty
01	Wiper Drive Assembly, RHD, motor body in black***	Wiper bracket has no M6 rivnuts for clam fixings also order item 30 x 2	Up to vin HH_10499	**A117M0104F**	1
01a	Wiper Drive Assembly, RHD, stepped motor body in silver	Wiper bracket has no M6 rivnuts for clam fixings also order item 30 x 2	From vin HH_10500	**B117M0104F**	1
01b	Wiper Drive Assembly, LHD, motor body in black***	Wiper bracket has no M6 rivnuts for clam fixings also order item 30 x 2	Up to vin HH_10499	**A117M0103F**	1
01c	Wiper Drive Assembly, LHD, stepped motor body in silver	Wiper bracket has no M6 rivnuts for clam fixings also order item 30 x 2	From vin HH_10500	**B117M0103F**	1
02	Wiper Arm/Blade Assembly			**B121B0057F**	1
02a	Wiper Arm/Blade Assembly		Malaysian market only	**A120B0556F**	1
03	Wiper Blade			**B120M0006H**	1
04	Flange Nut, M8 x 1.25, arm to spindle			**A111W3154F**	1
05	Screw, M8 x 20, cap hd., motor bracket to body			**A111W7141F**	3
06	Washer, M8, spring, motor bracket to body			**A075W4036Z**	3
07	Cover, wiper motor, RHD	Also fusebox mounting	Up to vin HH_10499	**A120B0133F**	1
07a	Cover, wiper motor, RHD	Also fusebox mounting	From vin HH_10500	**B120B0133F**	1
07b	Cover, wiper motor, LHD	Also fusebox mounting	Up to vin HH_10499	**A120B0134F**	1
07c	Cover, wiper motor, LHD	Also fusebox mounting	From vin HH_10500	**B120B0134F**	1

Function Code 17.21 Windscreen Wiper Motor, Wipers & Washers

Dep	Part Description	Remarks	Option	Part Number	Qty
08	Screw, No.10 x ½", pozi., cover fix.			**A075W5040Z**	2
09	Spire Nut No. 8, cover, wiper motor fix.			**A075W6016Z**	2
10	Windscreen Washer Jet			**A120W6796F**	2
11	Spacer, washer jet			**A111M6046K**	2
12	Sleeve, washer jet	Bonded over jet & spacer		**A111M0065F**	1
13	Tube, 'T' piece to jet	Cut to fit		**A116M0040V**	As req.
14	Tube, non return vave to 'T' piece	Cut to fit		**A116M0040V**	As req.
15	Tube, bottle to non return valve	Cut to fit		**A116M0040V**	As req.
16	'T' piece, washer tubing			**A111M6045F**	1
17	Valve, non return			**A100M6062H**	1
18	Clip, hose to wiper motor bracket			**A079W6185F**	1
19	Washer Bottle and Pump Assembly*	Not available order 19a, 20a & 22 see SB 2014/02		**B116M0039F**	1
19a	Washer Bottle and Pump Assembly**			**A120M6058F**	1
20	Bracket, washer bottle mounting*			**A117P0140F**	1
20a	Bracket, washer bottle mounting**			**A120P0197F**	1
21	Pop Rivet, bracket to boot bulkhead	Upper fixings		**A111W6614F**	2
21a	Pop Rivet, bracket to boot bulkhead	Lower fixing		**A111W6613F**	1
22	Flylead Washer Pump	Required when fitting item 19a to replace on any car fitted with item 19		**A120M0090S**	1

Function Code 17.21 Windscreen Wiper Motor, Wipers & Washers

Dep	Part Description	Remarks	Option	Part Number	Qty
23	Washer Pump	Service replacement for pump on A120M6058F		**A132U6027H**	1
24	Swivel Clip Male	Sill mounting & Baffle panel mounting		**A082W6587F**	3
25	Swivel Clip Female	Sill mounting & Baffle panel mounting		**A089W6296F**	3
26	Tie Wrap	Sill mounting		**A075W6038Z**	3
27	Grommet			**A138W6004F**	1
28	Clip Assembly	Sill mounting		**A120W6756F**	3
29	Washer Flat 3/16 x 3/4 x 16g	Upper fixings		**B075W4009Z**	2
30	Flange Nut, M6, clamshell to wiper bracket			**A117W3180F**	2
31	Wiper Motor Flylead Adaptor	Used to retro fit B level motor		**A120M6066S**	1
		*From SOP to 14 MY vin EHC10748 onwards (except vin EHH10741) if still fitted with B116M0039F			
		**From vin EHC10741 onwards (except vin's EHC10742, 10747 & 10748			
		***If unavailable order B level motor, cover & flylead item 31 also replace 15amp fuse with 20amp fuse			

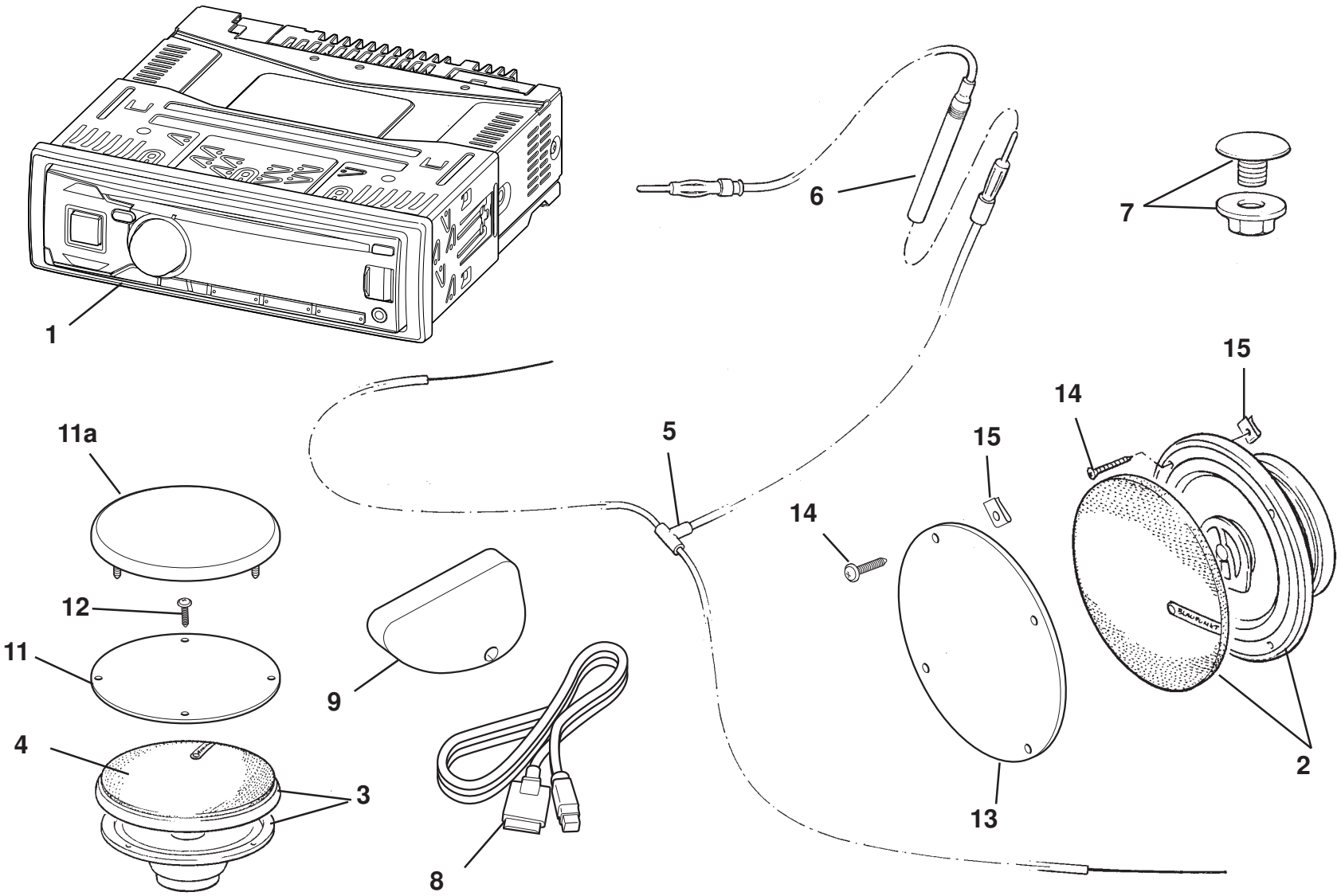

ELISE

17.27

Updated 5th March 2018

Service Parts List ELISE

Function Code 17.27 In Car Entertainment

Dep	Part Description	Remarks	Option	Part Number	Qty
01	Radio/CD Player, Alpine CDE-102Ji		Japan,	**A120M6042F**	1
01a	Radio/CD Player, Alpine CDE-111RM		Euro	**A120M6045F**	1
01b	Radio/CD Player, Alpine CDE-171RR			**A138M6004F**	1
01c	Radio/CD Player, Clarion CZ315		Euro, GCC	**A138M6017F**	1
01d	Radio/CD Player, Alpine CDE 181-RR		ROW	**A138M6009F**	1
01e	Bluetooth module, Clarion FZ502E		Euro, GCC	**A138M6023F**	1
02	Speaker Kit, rear, Alpine SPE-1302			**A120M6023F**	1
03	Speaker Kit, front, Blaupunkt ODX 102			**A120M6016F**	1
03a	Speaker, front, Alpine CO-AX ALP10CM	Speaker only no grille		**A120M0093F**	2
04	Dummy Speaker Grill		Elise Club Racer	**A120U0191F**	2
04a	Grille, front speaker Alpine	Also used as dummy grille for Club Racer without speakers		**A120M0092F**	2
05	Antenna, di pole, analogue			**A120M0018F**	1
05a	Antenna, di pole, DAB	Can also be used with Analogue Radio's		**A120M0021F**	1
06	Co-axial Cable, antenna, analogue			**A120M0019F**	1
06a	Co-axial Cable, antenna, DAB	Can also be used with Analogue Radio's		**A120M0022F**	1
07	Blanking Plug, engine cover unused aerial hole			**A117U6010F**	1
07a	Grommet, co-axial cable	Not illustrated, for item 6		**A116W6733F**	1

Function Code 17.27 In Car Entertainment

Dep	Part Description	Remarks	Option	Part Number	Qty
08	iPod Adaptor, Alpine KCE-433i	Not illus. For use with Alpine CDE-111RM & CDE-102		**A120M6041F**	1
09	iPod Holder, foam			**A120U0094F**	1
10	Tape, 3M Superbound 396, antenna to clamshell	Not illus. sold per roll (32M)		**A120M6007V**	As req.
11	Blanking Panel, front speakers			**A120U0174F**	2
11a	Blanking Panel, front speakers	Cloth trim 3 fixings		**A138V0837J**	2
12	Screw, No.6 x 0.75			**A075W5028Z**	8
13	Blanking Panel, rear speakers			**A117U0312F**	2
14	Screw, No.6 x 0.75			**A075W5028Z**	8
15	Spire Nut, No.8			**A075W6016Z**	8

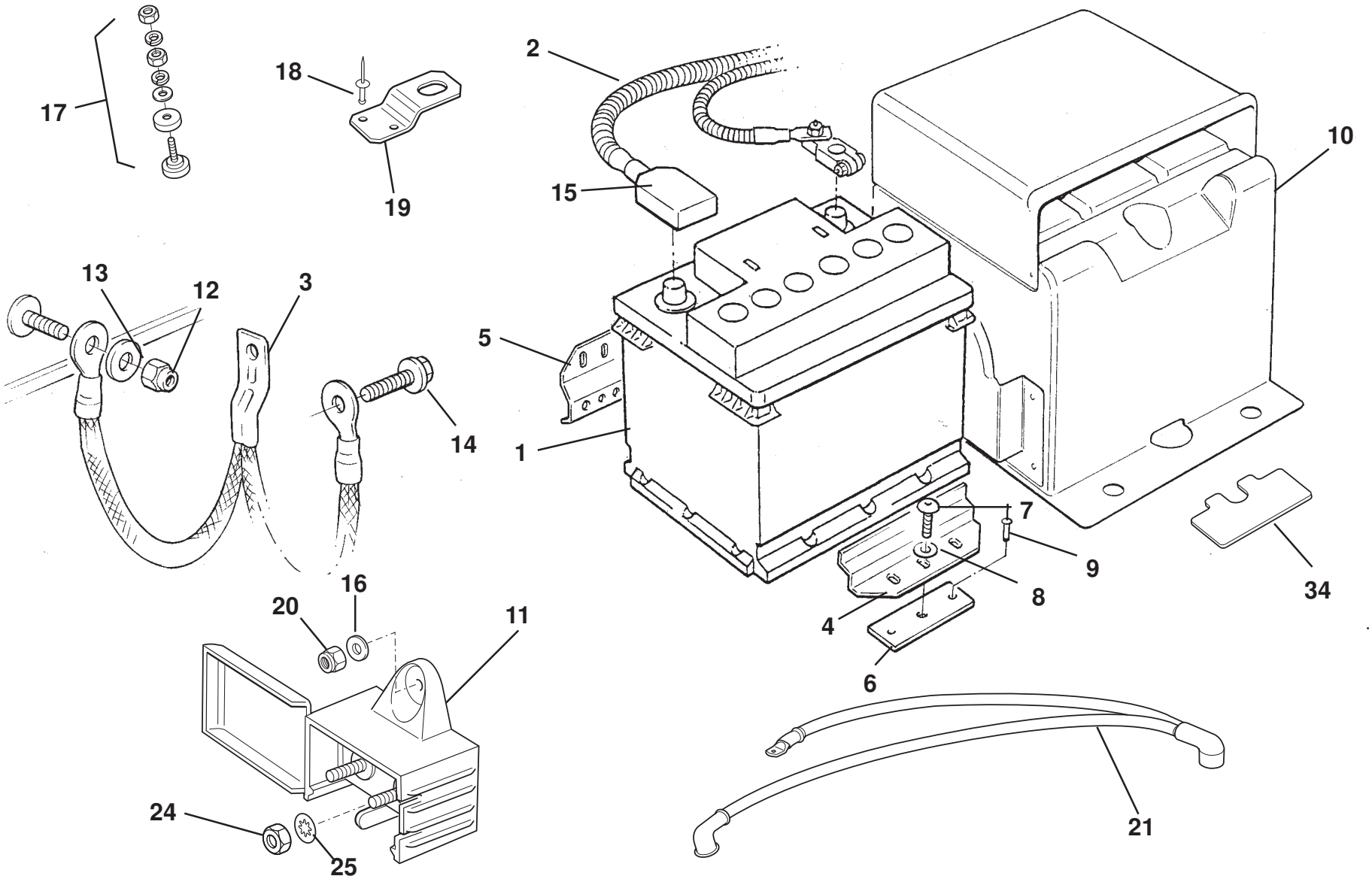

ELISE

17.31 page1

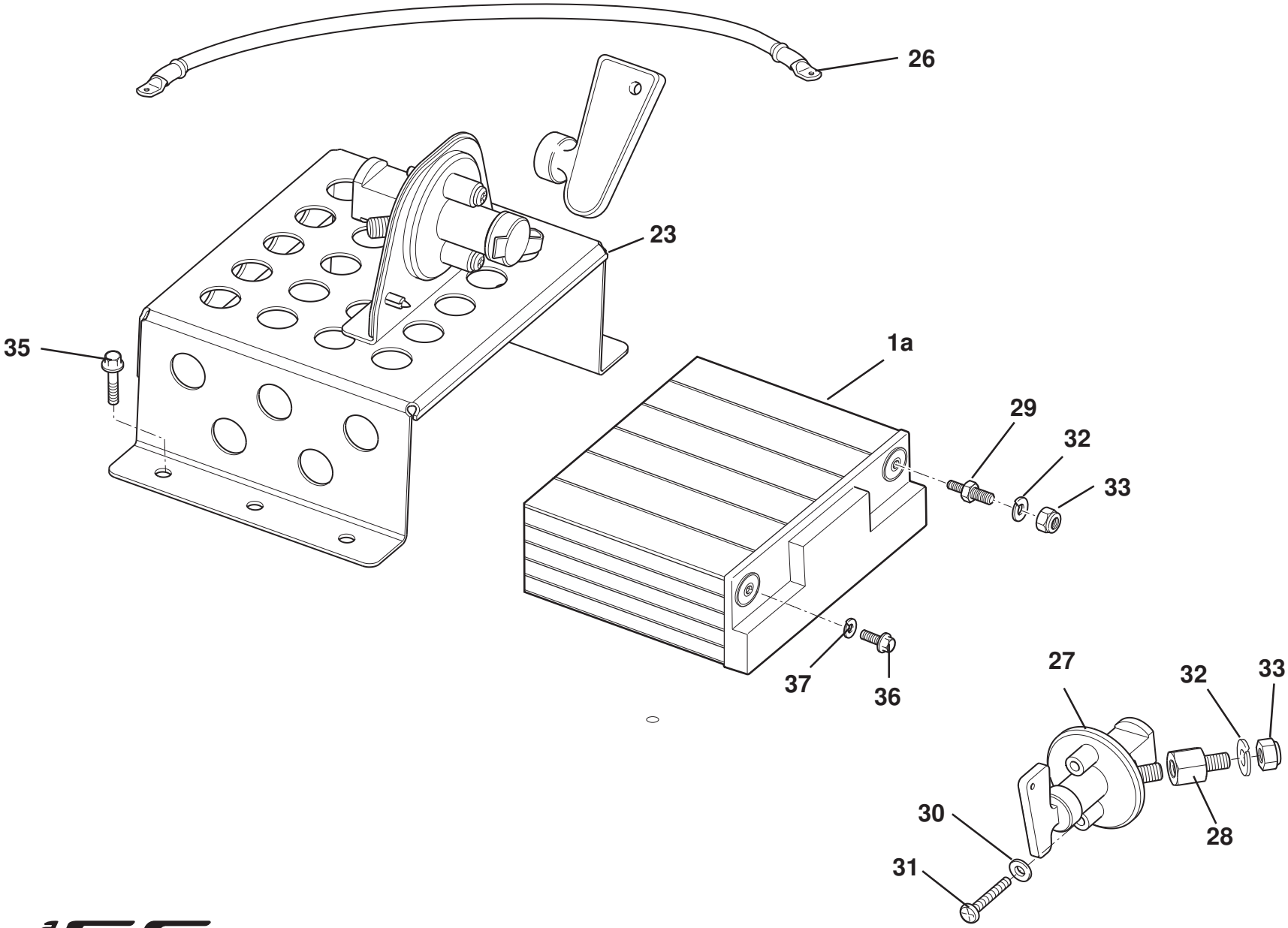

ELISE

17.31 page2

Function Code 17.31 Battery, Clamps, & Cables

Dep	Part Description	Remarks	Option	Part Number	Qty
01	Battery, Exide W063Z, 46Ah			**A120M6017F**	1
01a	Battery, Odyssey PS680 (lightweight)		Elise Club Racer	**A127M6004F**	1
02	Harness, battery, +VE & -VE		Common	**B120M0007F**	1
03	Earth Braid, chassis to engine/tranmission assy.			**A120M0008F**	1
04	Retaining Clamp, inboard			**A120M0014F**	1
05	Retaining Clamp, outboard			**A120M0015F**	1
06	Nutplate, retaining clamps			**A120M0016F**	2
07	Screw, M8, skt. button hd.,clamp fix.			**A075W7022F**	1
08	Washer, flat, M8 x 16.6 x 1.4, clamp fix.			**A075W4020Z**	1
09	Pop Rivet, nutplate to boot floor			**A111W6614F**	4
10	Battery Cover/Handbook Holder			**A120U0033J**	1
10a	Battery Cover/Handbook Holder		Elise Club Racer	**A120M0072F**	1
11	Binding Post Assembly	Scuttle & electrics mounting plate		**A340M6007F**	2
12	Nyloc Nut, M8	Front & rear earth points		**A075W3010Z**	2
13	Washer, flat, M8 x 16.6 x 1.4			**A075W4020Z**	2
14	Screw, M8 x 20, flg. hd., braid to transmission casing			**A116W5246F**	1
15	Cover, battery postive terminal, red			**A120M6035S**	1
16	Washer Flat 3/16 x 1/2 x16, battery post			**A075W4000Z**	1
17	Binding post, CDL power up (jumper cable connection)	Located front services compartment		**A089M6033F**	2

Function Code 17.31 Battery, Clamps, & Cables

Dep	Part Description	Remarks	Option	Part Number	Qty
18	Pop Rivet, 5/32 x 1/2 , battery post bracket	Located front services compartment		**A075W6068F**	2
19	Bracket, battery post	Located front services compartment		**C122B0147F**	1
20	Nyloc M5, battery post			**A075W3008Z**	1
21	Cable, starter to alternator			**B120M0009F**	1
22	Rubber Mat, battery	Not illustrated, located under inboard edge of battery		**A120M0024F**	1
23	Bracket Assembly, lightweight battery retention	Includes switch	Elise Club Racer	**A120M0076F**	1
24	Nut M8			**A075W3021Z**	2
25	Washer Shakeproof M8			**A075W4048Z**	2
26	Battery Cable, lightweight battery option		Elise Club Racer	**A120M0070F**	1
27	Switch, battery master		Elise Club Racer	**A127M6001F**	1
28	Adaptor, M10 female to M8 male		Elise Club Racer	**A120M0068F**	1
29	Adaptor, M6 to M8 male		Elise Club Racer	**A120M0069F**	1
30	Washer M5 shakeproof, battery master swich		Elise Club Racer	**A075W4045H**	2
31	Screw M5 x 40 pan pozi, battery master swich		Elise Club Racer	**A100W5154H**	2
32	Washer M8 Spring		Elise Club Racer	**A075W4036F**	2
33	Nut Nyloc M8		Elise Club Racer	**A907E6284F**	2
34	Plate, battery cover retaining		Elise Club Racer	**A120M0074F**	1
35	Screw M6 x 20 hex flg			**A132W5004F**	4
36	Screw M6 x 16 hex flg			**A075W1028Z**	1

Function Code 17.31 Battery, Clamps, & Cables

Dep	Part Description	Remarks	Option	Part Number	Qty
37	Washer M6 spring			**A075W4035Z**	1
38	Rubber Self-adhesive 1"x 1/8	Not illustrated 4 strips on battery bracket	Elise Club Racer	**A036B6221F**	0.7m

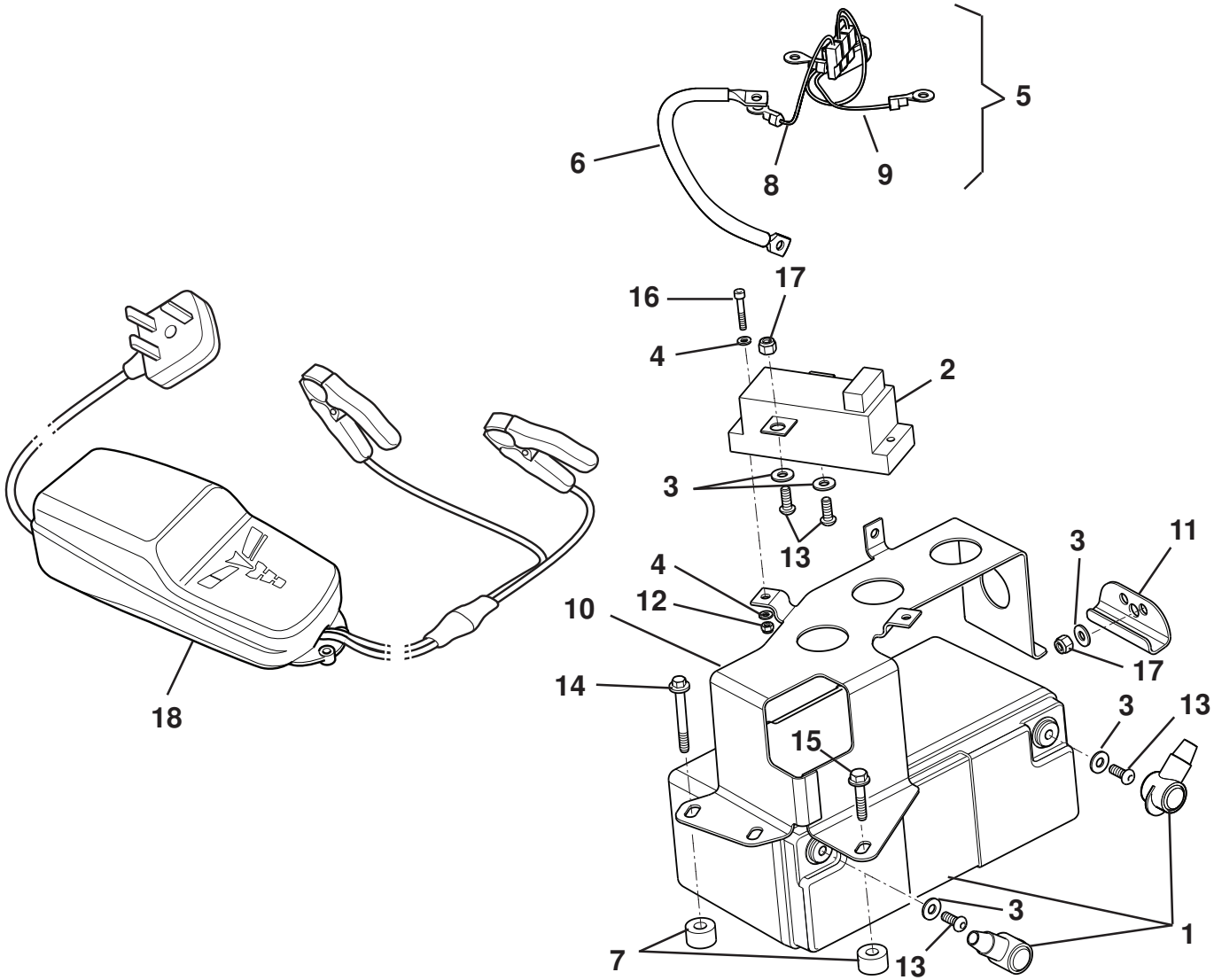

ELISE

17.32

Updated 3rd April 2017

Service Parts List ELISE

Function Code 17.32 Lithium Battery, Clamps & Cables

Dep	Part Description	Remarks	Option	Part Number	Qty
01	20ah Lithium Battery			**A120M6065F**	1
02	Battery Contol Unit			**A708M6032F**	1
03	Washer M6 x 15 x 1.5			**A075W4015Z**	6
04	Washer M4 x 9 x 0.8			**A082W4099F**	4
05	Litium Battery Harness Kit			**A704M0012F**	1
06	Cable Positve, litium battery			**A704M0013F**	1
07	Spacer			**A138M0163F**	2
08	Cable Battery Protection Module, sense			**A708M0057F**	2
09	Cable Signal Negatve, litium battery			**A132M0587F**	1
10	Battery Clamp			**A120M0111F**	1
11	Battery Tray Hook			**A120M0113F**	1
12	Nut Nyloc M4			**A132W3019F**	2
13	Screw M6 x 16 btn cap hd s/s bk			**A082W7105F**	4
14	Bolt M6 x 50 hex flg hd			**A128W2219F**	1
15	Bolt M6 x 30 hex flg hd			**A124W5294F**	1
16	Screw M4 x 25 skt cap hd			**B100W7082F**	2
17	Nut Nyloc M6			**A075W3009Z**	3
18	Litium Battery Charger			**A132M6216F**	1

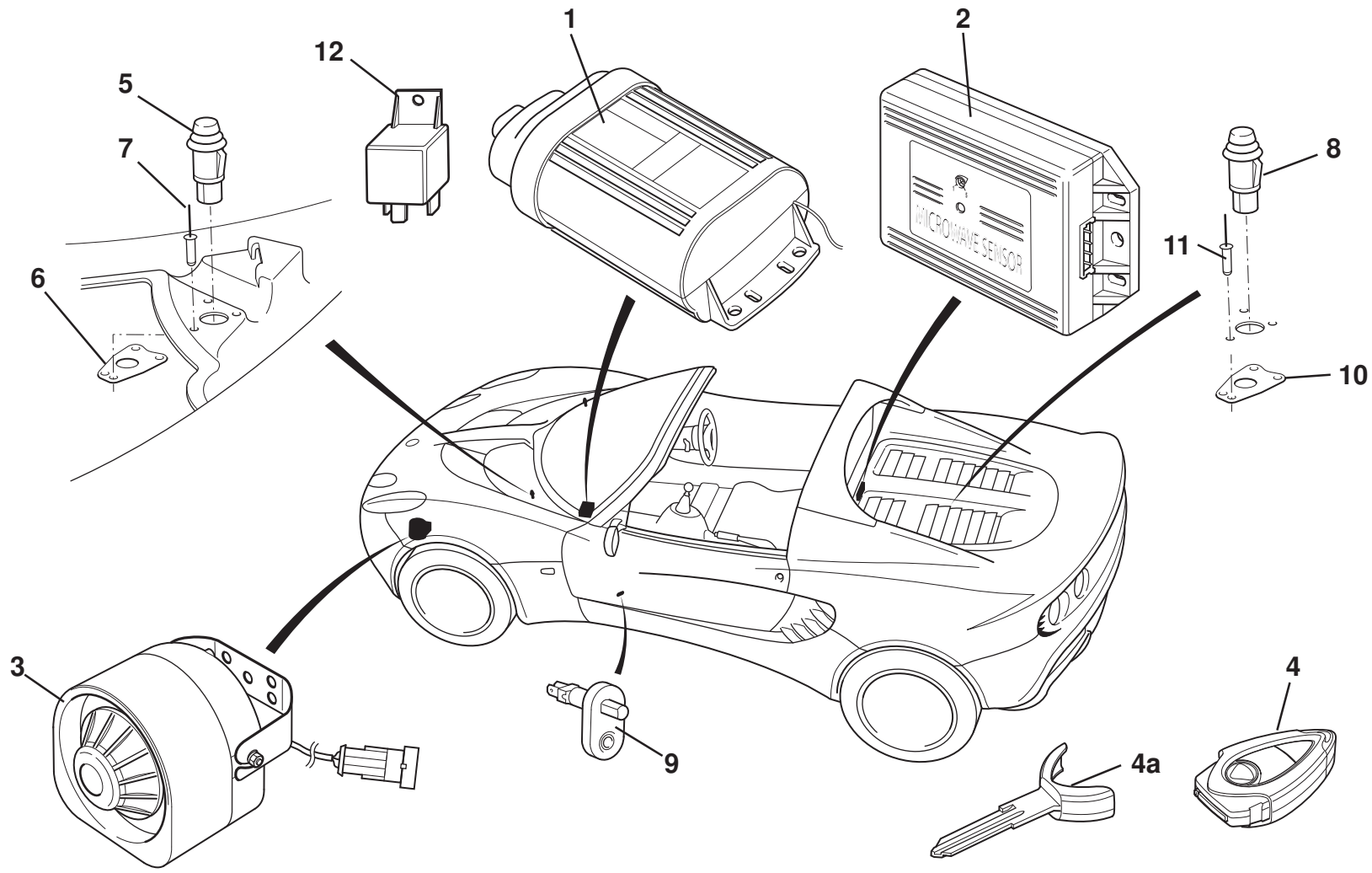

ELISE

17.33b

Function Code 17.33b Security Alarm System, PFK, Parking Sensors & Camera

Dep	Part Description	Remarks	Option	Part Number	Qty
01	Controller, PFK	Includes 2 transmitter fobs		**A132M0117F**	1
01a	Alarm Kit, PFK	Includes CDL module		**B121M0050F**	1
02	Microwave Sensor, PFK	No longer fitted from '15MY VIN FHC10210		**A120M0047F**	1
03	Siren, PFK	Includes bracket, fixings, if unavailable order 01a		**A132M6082F**	1
04	Transmitter Fob	Programme transmitter using PIN*		**A120M0049F**	2
04a	Key Blade, uncut			**A120H0008S**	2
04b	Key Blade, cut*	Order from Bolton Lock		**A120H0009S**	2
05	Microswitch, alarm activation, front access covers			**A111M6037F**	2
06	Bracket, front microswitch mounting			**A120B0127F**	2
07	Pop rivet, domed, black, brackets to clamshell			**A082W6512F**	6
08	Microswitch, alarm activation, engine cover	Located in striker/lift assembly		**A111M6037F**	1
09	Microswitch, alarm activation, doors	Also for courtesy lamp		**A111M6035F**	2
10	Bracket, rear microswitch mounting			**A120B0127F**	1
11	Pop rivet, domed, black, bracket to clamshell			**A082W6512F**	3
12	Tilt Sensor		Dutch Market	**A132M6119F**	1
		*NOTE: For full information on all Lotus Security Sytems, see LSL483g			

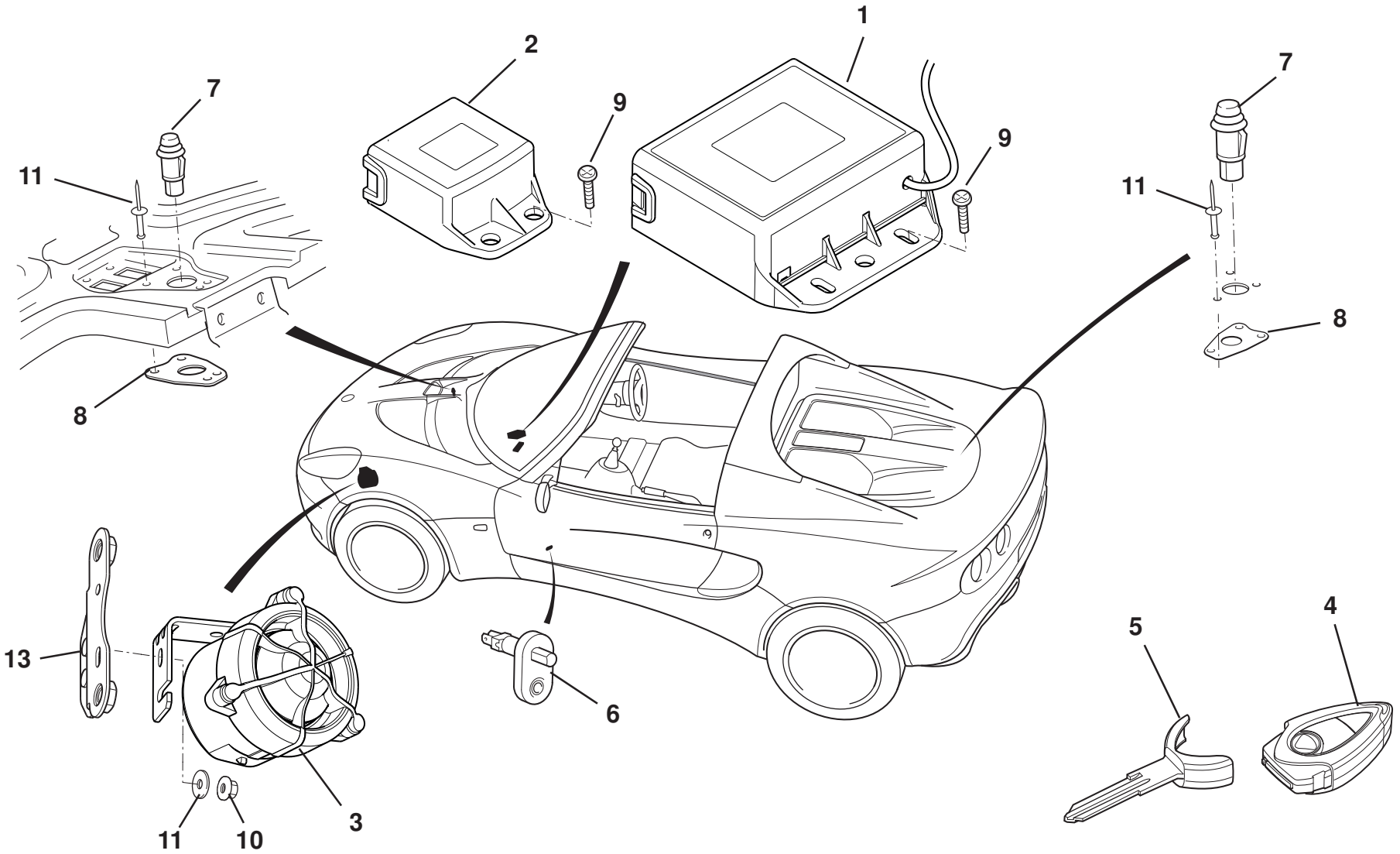

ELISE

17.33c

Function Code 17.33c Security Alarm System, Gemini, Parking Sensors & Camera

Dep	Part Description	Remarks	Option	Part Number	Qty
01	Alarm ECU, 433 MHz	Includes 2 transmitter fobs		**A138M0111F**	1
01a	Alarm ECU, 315 MHz	Includes 2 transmitter fobs	Japan	**A138M0110F**	1
02	Alarm CDL Module			**A132M0532F**	1
03	Alarm Siren			**A132M6172F**	1
04	Transmitter Fob 433 MHz			**A138M6021S**	2
04a	Transmitter Fob 315 MHz		Japan	**A138M6021S**	2
05	Key Blade, uncut	Excludes transmitter fob		**A120H0008S**	2
05a	Key Blade, cut*	Order from Bolton Lock, excludes transmitter fob		**A120H0009S**	2
06	Microswitch, alarm activation, doors	Also for courtesy lamp		**A111M6035F**	2
07	Microswitch, alarm activation, front access cover			**A111M6037F**	1
08	Bracket, front microswitch mounting			**A120B0127F**	1
09	Screw, M4 x 14, pan pozi., ECU to chassis			**B082W5141F**	4
10	Nut M5 siren mounting			**A100W3113F**	2
11	Pop rivet, domed, black, bracket to clamshell			**A082W6512F**	3
12	Washer M5 x10 x 0.8, siren mounting			**A075W4011Z**	2
13	Bracket Assembly Alarm Siren			**A120B0593F**	1
		*NOTE: For full information on all Lotus Security Sytems, see LSL483g			

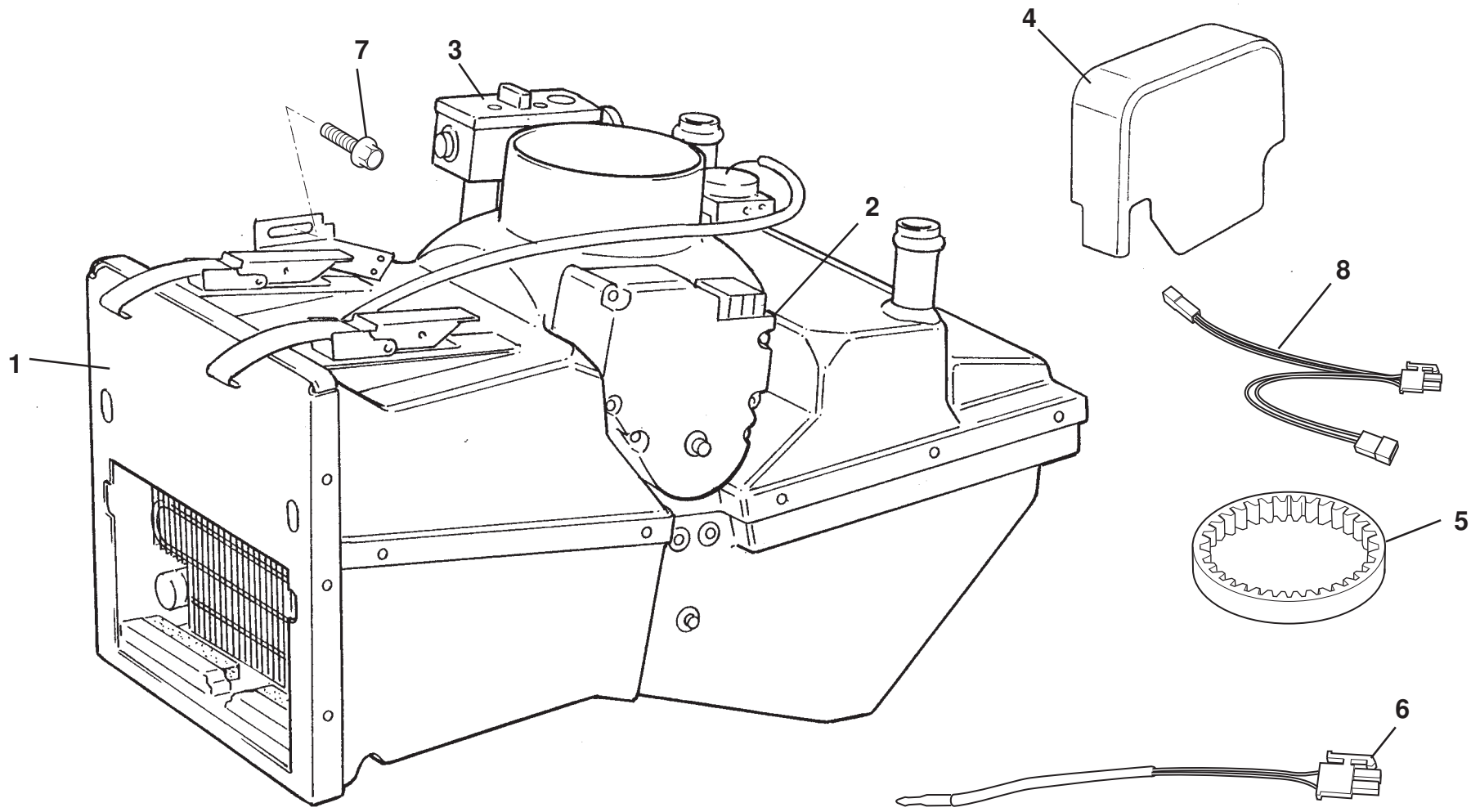

ELISE

18.01

Function Code 18.01 Heater/ Air Conditioning Assemblies, Housings

Dep	Part Description	Remarks	Option	Part Number	Qty
01	Heater/AC Housing Assembly			**A120P0185F**	1
01a	Heater Unit Assembly			**A120P0019F**	1
02	Actuator, heater/AC flaps			**A117M6052S**	1
03	Expansion Valve	See 18.03			1
04	Cover, actuator			**A117P0158K**	1
05	Drive Belt, heater flap			**A117P6001S**	1
06	Thermostat			**A120P6012S**	1
07	Screw, M6 x 20, hex. flg. hd., AC/htr. assy. to chassis			**A117W2203F**	2
08	Jumper Harness, HVAC module/locator			**A120P0191S**	1
09	Jumper Harness, blower motor*	P/O kit A120P0148S, see 18.07a		**A120P0150S**	1
		* See Service Bulletin 2007/13			

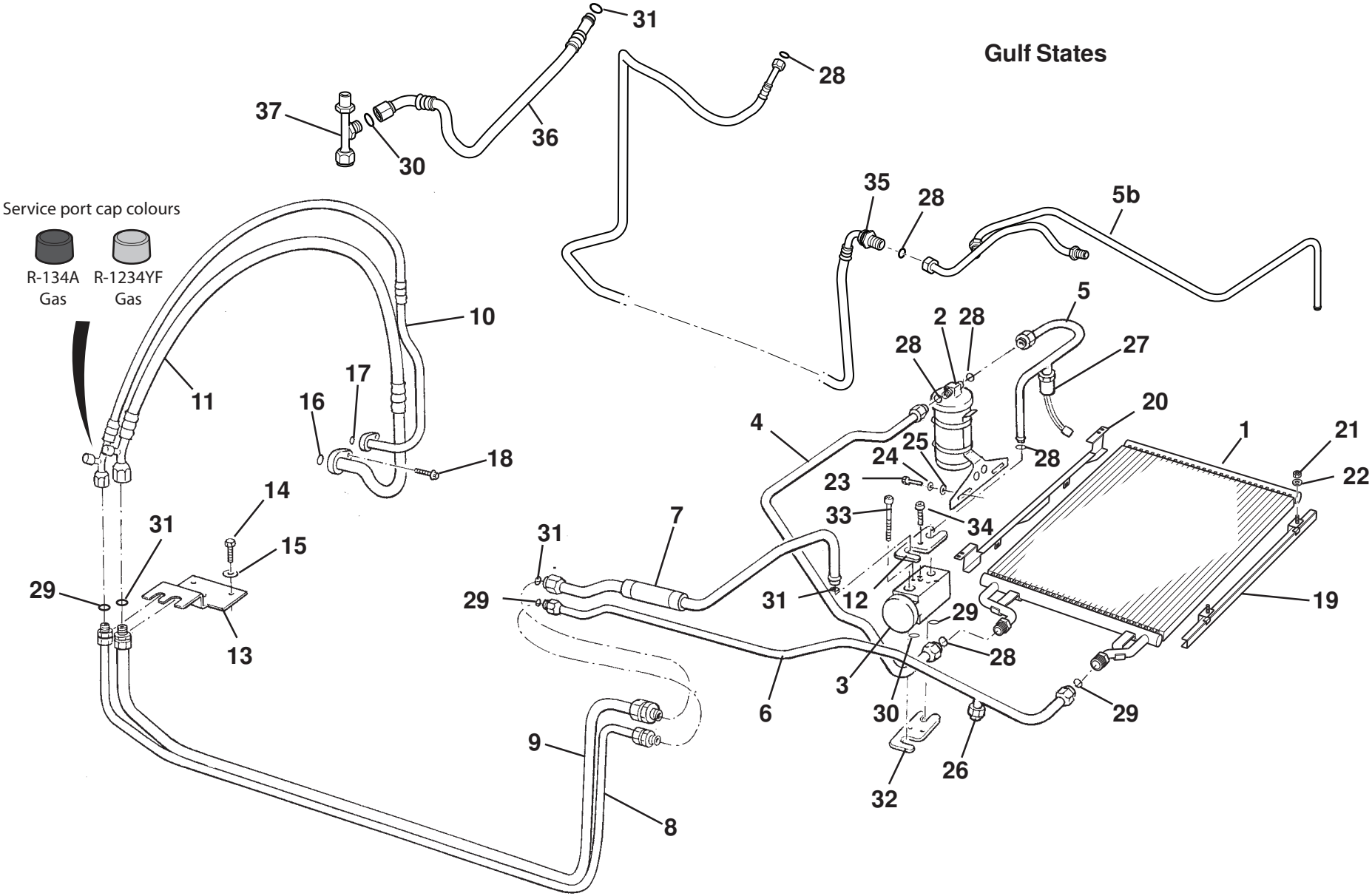

ELISE

18.03

Updated 2nd January 2018

Service Parts List ELISE

Function Code 18.03 AC Components, Pipes, Hoses

Dep	Part Description	Remarks	Option	Part Number	Qty
01	Condenser, Sanden			**A117P0130H**	1
02	Receiver Drier/Bracket Assembly			**A117P0060F**	1
02a	Receiver Drier Assembly		Gulf States	**A120P6007F**	1
02b	Bracket, receiver drier assembly		Gulf States	**A120P0162F**	1
02c	Bracket stud Plate, receiver drier assembly		Gulf States	**A120P0163F**	1
03	Expansion Valve		1ZR, 2ZR	**A132P0107H**	1
04	Refrigerant Pipe, receiver drier to condenser, LHD**	R-1234YF & R-134A gas		**B120P0007F**	1
04a	Refrigerant Pipe, receiver drier to condenser, RHD**	R-1234YF & R-134A gas		**B120P0006F**	1
04b	Refrigerant Pipe, receiver drier to condenser	R-134A gas only	Gulf States	**A120P0152F**	1
05	Refrigerant Pipe, reciever drier to expansion valve, LHD**	R-1234YF & R134A gas,		**B120P0005F**	1
05a	Refrigerant Pipe, receiver drier to expansion valve, RHD**	R-1234YF & R-134A gas		**B117P0049F**	1
05b	Refrigerant Pipe, receiver drier to TXV & bodyside	R-134A gas only	Gulf States	**A120P0151F**	1
06	Refrigerant Pipe, condenser to sill connection**	R-1234YF & R-134A gas		**B117P0051F**	1
06a	Refrigerant Pipe, condenser to sill connection	R-134A gas only	Gulf States	**A120P0177F**	1
07	Refrigerant Pipe, expansion valve to sill connection, LHD**	R-1234YF & R-134A gas		**B120P0009F**	1
07a	Refrigerant Pipe, expansion valve to sill connection, RHD**	R-1234YF & R-134A gas		**B117P0047F**	1
7b	Refrigerant Pipe, TXV to bodyside suction	R-134A gas only	Gulf States	**A120P0153F**	1
08	Refrigerant Hose, high pressure, rear to front connections		1ZR,2ZR, production build	**A120P0194F**	1

Function Code 18.03 AC Components, Pipes, Hoses

Dep	Part Description	Remarks	Option	Part Number	Qty
08a	Refrigerant Hose, high pressure, rear to front connections	See Service Bulletin 2006/33	Service only	**A120P0025S**	1
09	Refrigerant Hose, suction line, rear to front connections		1ZR,2ZR, production build	**A120P0195F**	1
09a	Refrigerant Hose, suction line, rear to front connections	See Service Bulletin 2006/33	Service only	**A120P0024S**	1
10	Pipe/Hose Assembly, compressor discharge	R-134A gas service ports, Black cap	1ZR, alternative part 10a	**A120P0184F**	1
10a	Pipe/Hose Assembly, compressor discharge	R-134A gas service ports, Black cap	1ZR, 2ZR, A120P0193F R/B	**C120P0193F**	1
10b	Pipe/Hose Assembly, compressor discharge**	R-1324YF gas service ports, Light Grey cap	1ZR, 2ZR, B120P0193F R/B	**A120P0209F**	1
11	Pipe/Hose Assembly, compressor suction	R-134A gas service ports, Black cap	1ZR, alternative part 11a	**A120P0183F**	1
11a	Pipe/Hose Assembly, compressor suction	R-134A gas service ports, Black cap	1ZR, 2ZR, A120P0192F R/B	**C120P0192F**	1
11b	Pipe/Hose Assembly, compressor suction**	R-1234YF gas service ports,, Light Grey cap	1ZR, 2ZR, B120P0192F R/B	**A120P0208F**	1
12	Clamp Plate, pipes to expansion valve			**A082P4402F**	1
13	Bracket, pipes to chassis RH rear			**A120P0010F**	1
13a	Bracket, HVAC pipes to chassis rail		Gulf States	**A120P0179F**	1
14	Screw M6 x 20, hex. hd., plate to chassis			**A117W2203F**	3
15	Washer M6 x 25 x 1.4mm S/S, flat, plate to chassis			**B075W4017Z**	3
16	'O' Ring, compressor to suction line	R-134A gas only		**A120P6002H**	1
16a	'O' Ring, 13.4 x 2.4 compressor to suction line	R-1234YF & R-134A gas		**A120P6016H**	1
17	'O' Ring, compressor to discharge line	R-134A gas only		**A120P6001H**	1

Function Code 18.03 AC Components, Pipes, Hoses

Dep	Part Description	Remarks	Option	Part Number	Qty
17a	'O' Ring, 10.8 x 2.4 compressor to discharge line	R-1234YF & R-134A gas		**A120P6017H**	1
18	Screw M6 x 20, skt cap hd., pipes to compressor			**A082W7041F**	2
19	Bracket, condenser to radiator, front	For cylindrical tank condenser		**A124P6005S**	1
20	Bracket, condenser to radiator, rear	For cylindrical tank condenser		**A124P6006S**	1
21	Nyloc Nut, M6, condenser to radiator front			**A075W3009Z**	2
22	Washer, flat, M6, condenser to radiator front			**A075W4013Z**	2
23	Screw, M6 x 16, hex. hd., bracket to chassis			**A075W1028Z**	2
24	Washer, spring, M6, bracket to chassis			**A075W4035Z**	2
25	Washer, flat, M6 x 12.1 x 1.4, bracket to chassis			**A075W4013Z**	2
26	Pressure Relief Valve			**A111P6030H**	1
27	Trianary Switch			**A117P0059F**	1
28	'O' Ring, No. 6, pipe joints	R-134A gas only		**A082P6078F**	4
28a	'O' Ring, 7.65 x 1.78 , pipe joints	R-1234YF & R-134A gas		**A120P6015H**	4
29	O' Ring, No, 8, pipe joints, expansion valve to evaporator	R-134A gas only		**A082P6079F**	4
29a	'O' Ring, 10.82 x 1.78, pipe joints	R-1234YF & R-134A gas		**A120P6013H**	4
30	'O' Ring, No 10, expansion valve to evaporator	R-134A gas only		**A082P6080F**	1
30a	'O' Ring, 14.0 x 1.78	R-1234YF & R-134A gas			1
31	'O' Ring, No.12, pipe joints	R-134A gas only		**A082P6081F**	3
31a	'O' Ring, 17.17 x 1.78, pipe joints	R-1234YF & R-134A gas		**A120P6014H**	3
32	Clamp Plate, valve to evaporator	R-134A gas only		**A082P4401F**	1
33	Screw, M5 x 40, cap hd. skt., valve to clamp			**A100W7081F**	2

Function Code 18.03 AC Components, Pipes, Hoses

Dep	Part Description	Remarks	Option	Part Number	Qty
34	Screw, M6 x 16, cap hd. skt., clamp to valve			**A075W7017F**	1
35	Hose, aux ac unit rear to front bodyside		Gulf States	**A120P0155F**	1
36	Hose, suction line to aux ac unit	R134A gas only	Gulf States	**B120P0156F**	1
37	Tee connector Assembly, suction line		Gulf States	**B120P0154F**	1
		**Note: R-1234YF gas introduced on EU cars from vin GH_11097, refer to SB 2016/21			

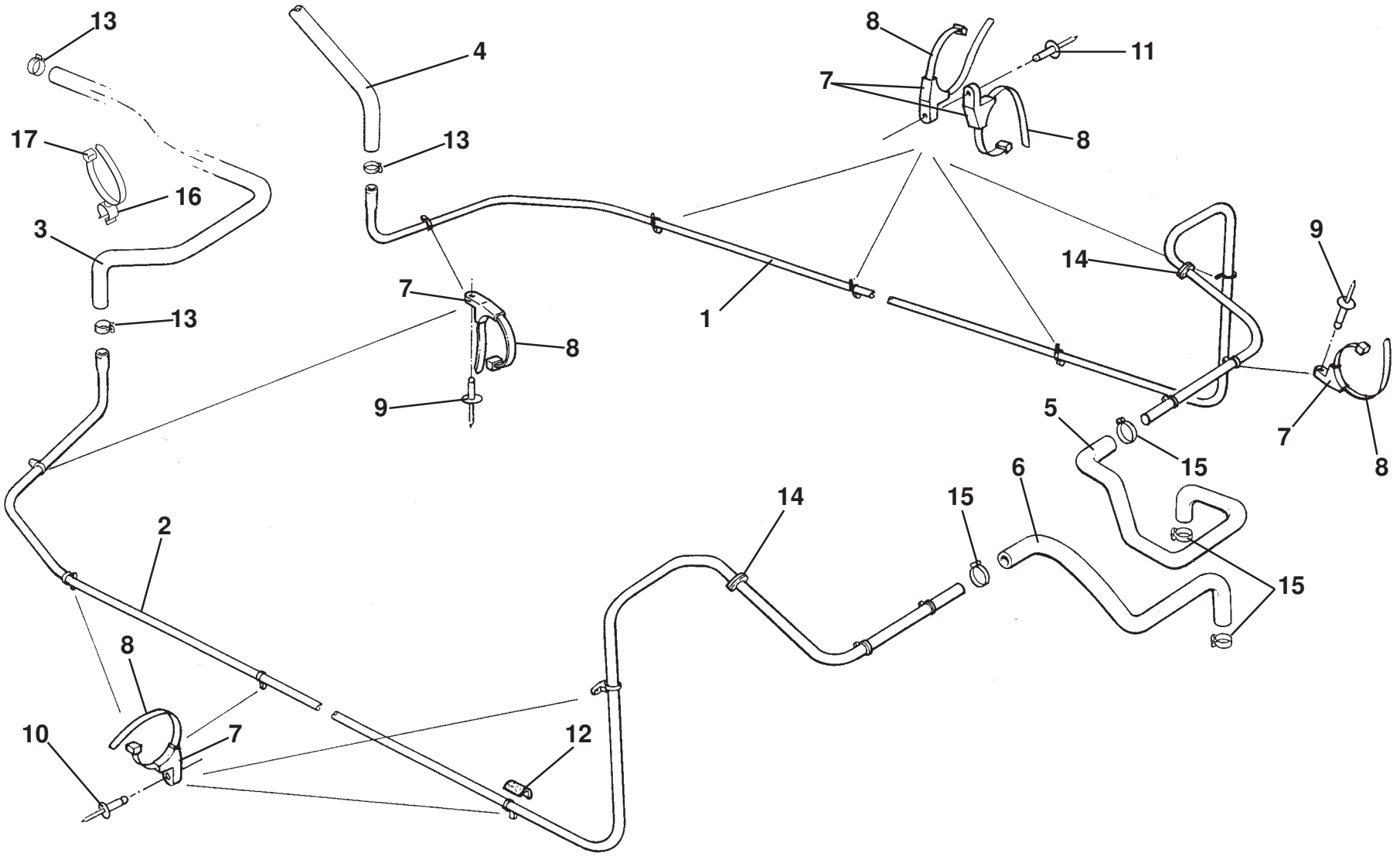

ELISE

18.05

Function Code 18.05 Heater, Pipes, Hoses

Dep	Part Description	Remarks	Option	Part Number	Qty
01	Pipe, heater return, LH			**C116K0020F**	1
02	Pipe, heater feed, RH			**C116K0022F**	1
03	Hose, re-circ pump to feed pipe		1ZR	**A120K0035F**	1
03a	Hose, re-circ pump to feed pipe		2ZR	**A120K0056F**	1
04	Hose Assembly, return pipe to engine	Also see 46.01, includes bleed		**E120K0004F**	1
05	Hose, heater outlet, RHD			**A117P0023F**	1
05a	Hose, heater outlet, LHD			**A117P0024F**	1
06	Hose, heater inlet, RHD			**A117P0021F**	1
06a	Hose, heater inlet, LHD			**A117P0022F**	1
07	Saddle Clip, cable tie, pipes to chassis			**A082W6324F**	14
08	Cable Tie, pipes retention			**A075W6038F**	14
09	Blind Rivet, saddle clamp to chassis			**A085W6259F**	6
10	Blind Rivet, saddle clamp to chassis			**A111W6613F**	6
11	Blind Rivet, saddle clamps to chassis			**A111W6614F**	4
12	Foam Strip, self adhesive, pipe protection			**A082U6067F**	As req.
13	Hose Clamp, 41mm, hoses to pipes/spigots			**A116K6016F**	4
14	Grommet, pipes through baffle			**A111P0003K**	2
15	Hose Clip, hoses to pipes/heater spigots			**A079K6019Z**	4
16	Swivel Clip		2ZR no a/c	**A116W6692F**	1
17	Swivel Clip, tie wrap		2ZR no a/c	**A082W6324F**	1
18	Clip, cable tie, front pipes securing			**A120W6779F**	2

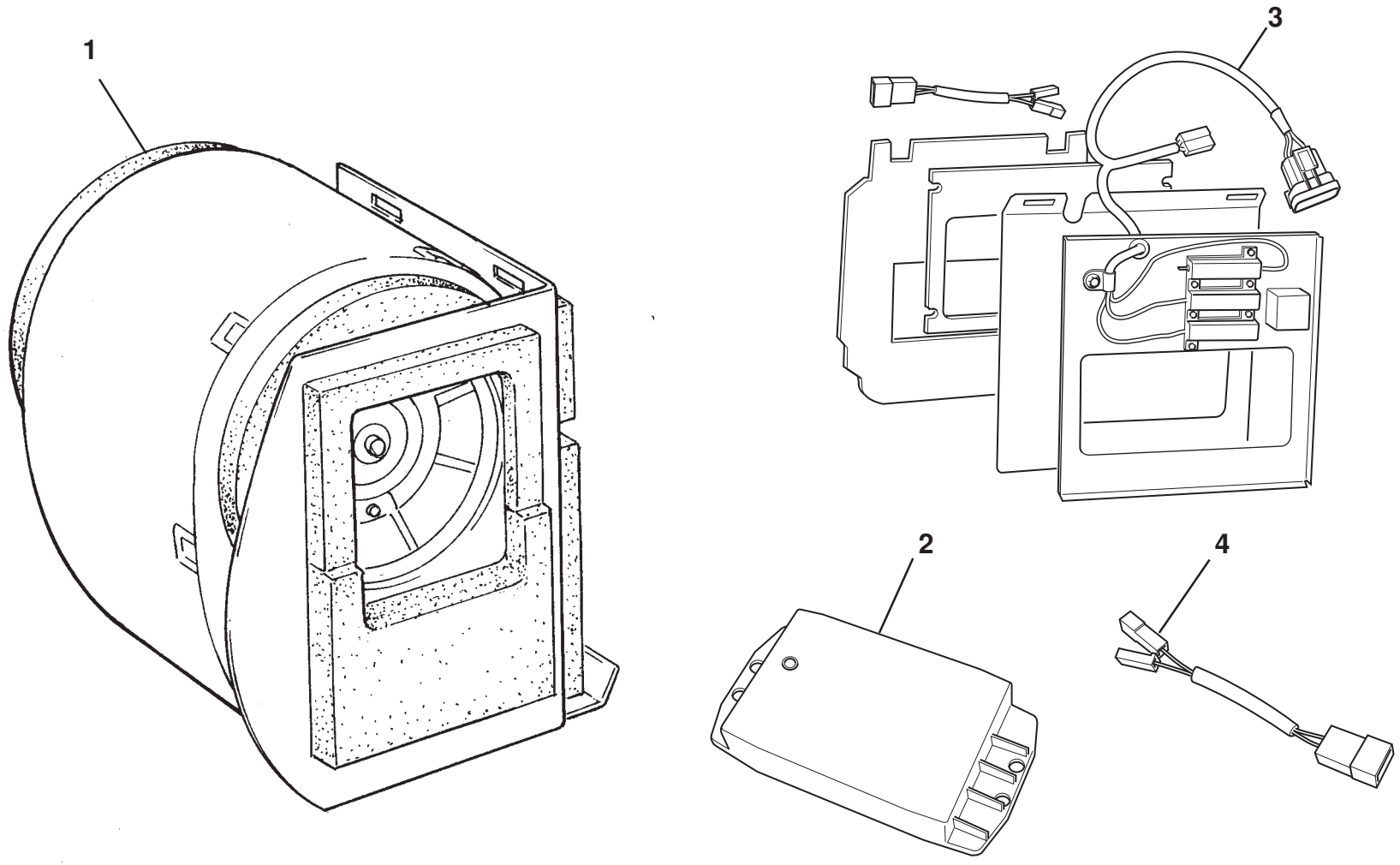

ELISE

18.07a

Function Code 18.07a AC Interior Blower Motor

Dep	Part Description	Remarks	Option	Part Number	Qty
01	Blower & Motor Assembly	Without resistor*		**B117P0163F**	1
02	Resistor, blower motor			**A117P6000S**	1
03	Resistor Kit, blower motor			**A120P0148S**	1
04	Jump Harness, motor to resistors	Remove resistor to blower item 01*		**A120P0150S**	1
05	Assemby HVAC Blower Motor	Not illustrated, to be used with fresh air filter housing	Gulf states	**A120P0158F**	1
		* See Service Bulletin 2007/13			

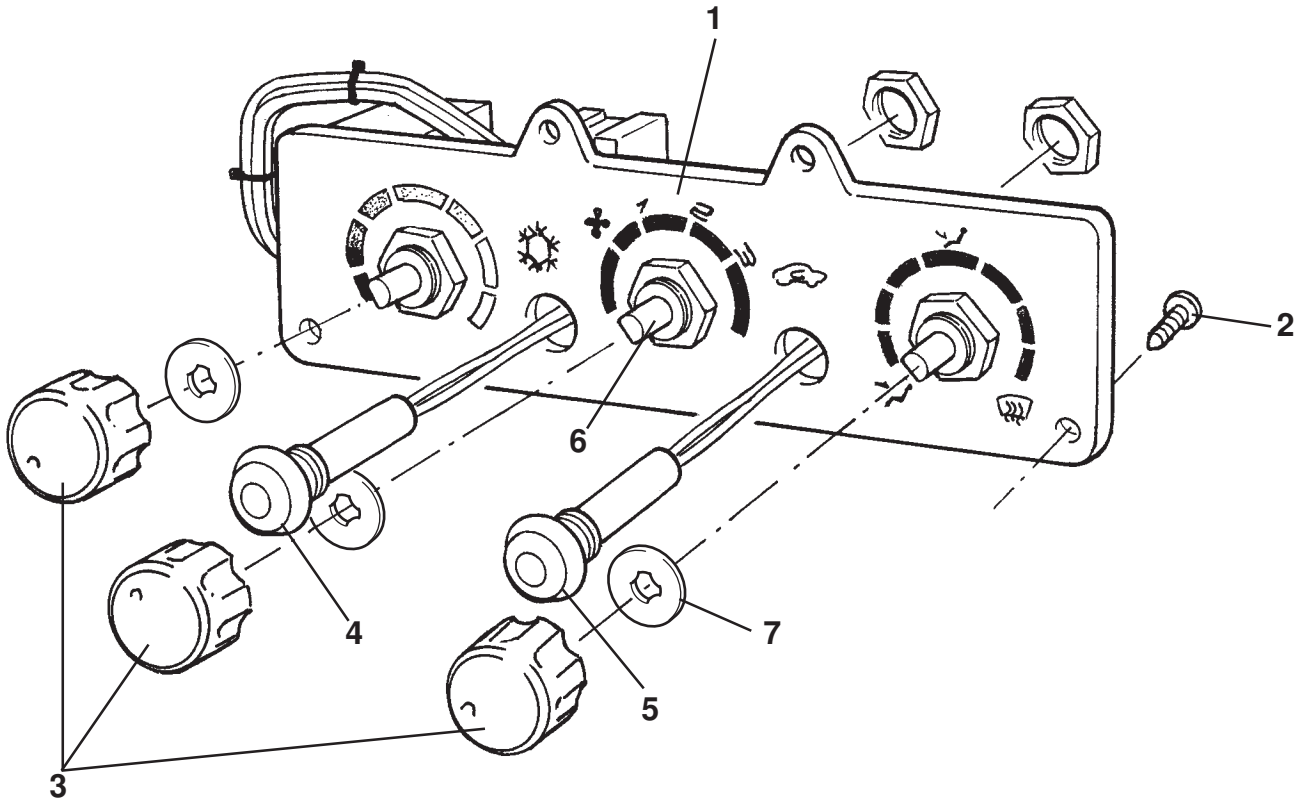

ELISE

18.09a page1

Updated 3rd March 2017

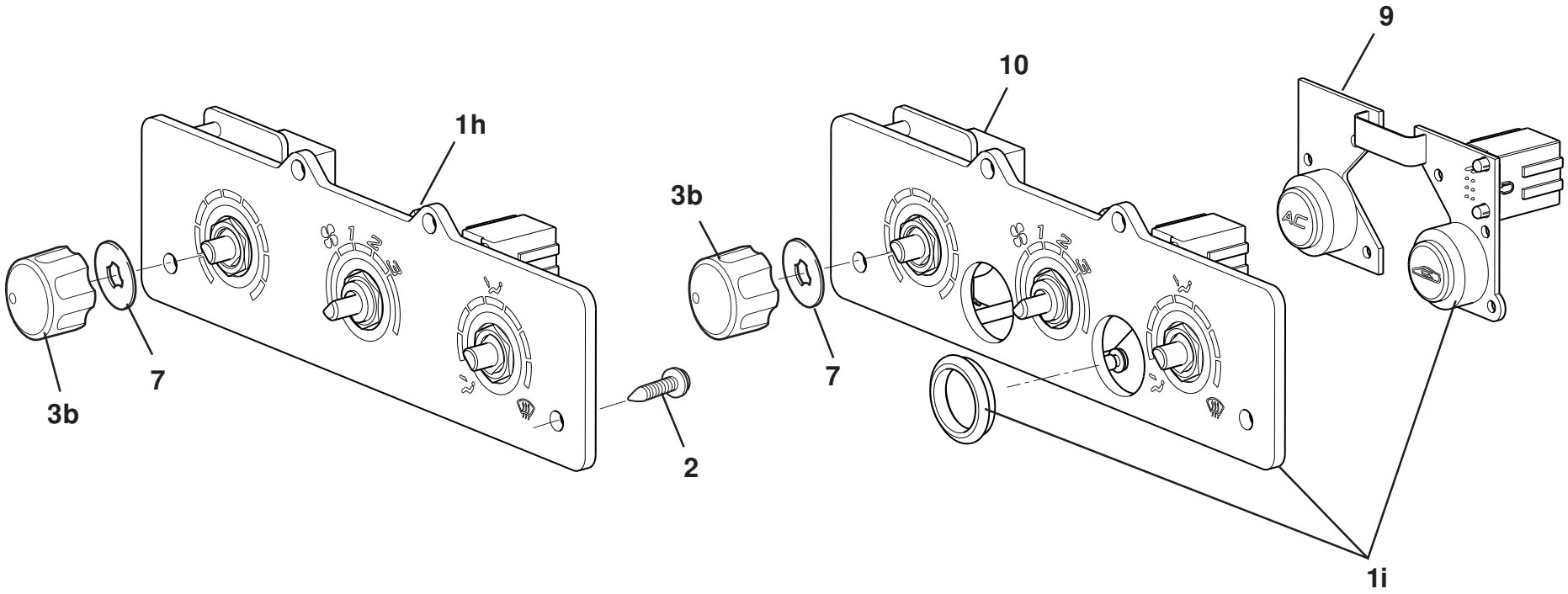

ELISE

18.09a page2

Updated 3rd July 2017

Function Code 18.09a AC/Heater Driver Operated Controls

Dep	Part Description	Remarks	Option	Part Number	Qty
01	Switch Panel Assembly, AC, RHD	Incl. temp, fan & dist. Switches	AC cars	**A117P0147F**	1
01a	Switch Panel Assembly, AC, LHD	Incl. temp, fan & dist. Switches	AC cars	**A117P0146F**	1
01b	Switch Panel Assembly, illuminated, AC, RHD	Incl. temp, fan & dist. Switches	AC cars	**A120P0020F**	1
01c	Switch Panel Assembly, illuminated, AC, LHD	Incl. temp, fan & dist. Switches	AC cars	**A120P0021F**	1
01d	Switch Panel Assembly, heater, RHD	Incl. temp, fan & dist. Switches	Heater cars	**A117P0149F**	1
01e	Switch Panel Assembly, heater, LHD	Incl. temp, fan & dist. Switches	Heater cars	**A117P0148F**	1
01f	Switch Panel Assembly, illuminated, heater, RHD	Incl. temp, fan & dist. Switches	Heater cars	**A120P0022F**	1
01g	Switch Panel Assembly, illuminated, heater, LHD	Incl. temp, fan & dist. Switches	Heater cars	**A120P0023F**	1
01h	Switch Panel Assembly, heater,		MY16.5	**A138M0121F**	1
01i	Switch Panel Assembly Complete, AC	Includes Items 09 & 10	MY16.5	**A138M0122F**	1
02	Screw, Ejot 1452K 50 x 18, black, panel fix.			**A117W5277F**	4
03	Knob, brushed/polished, climate controls			**B117U0036F**	3
03a	Knob, polished, climate controls			**A117U0201F**	3
03b	Knob, illuminated		Illuminated panel	**A120U0091F**	3
04	Switch, AC, blue tell-tale			**A117M0026F**	1
05	Switch, Recirculation, blue tell-tale			**A117M0026F**	1
06	Switch, 3 speed fan			**A117M6053S**	1
07	Washer M6 anti loss			**A132W4005F**	3

Function Code 18.09a AC/Heater Driver Operated Controls

Dep	Part Description	Remarks	Option	Part Number	Qty
08	Switch, HVAC	Not illustrated	Gulf States	**A120M0058F**	1
09	Switch Panel			**A138M0095H**	1
10	HVAC Control Panel			**A138M0155F**	1

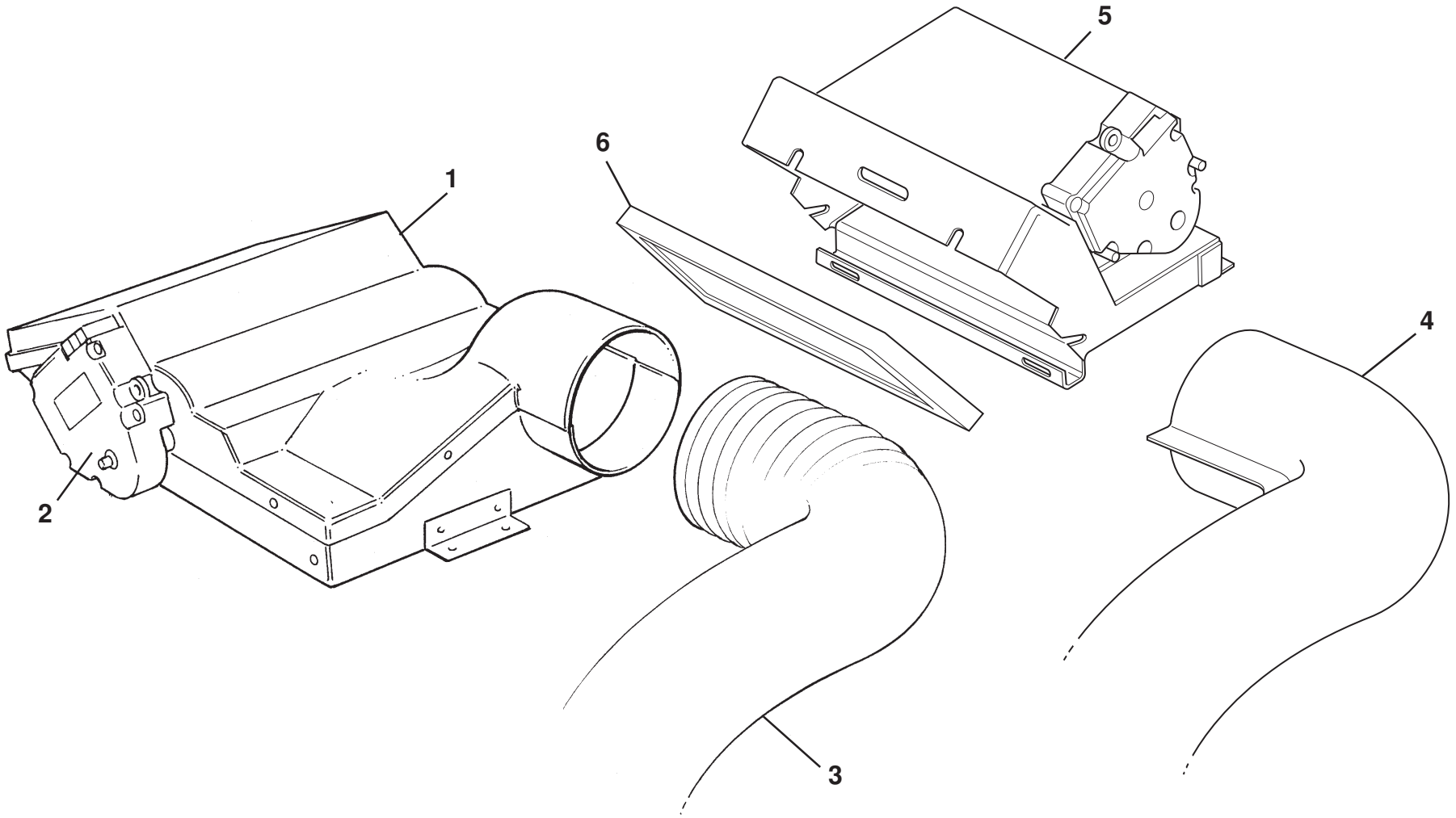

ELISE

18.12

Function Code 18.12 AC/Heater Air Distribution Plenum

Dep	Part Description	Remarks	Option	Part Number	Qty
01	Air Distribution Plenum, LHD			**B117P0041F**	1
01a	Air Distribution Plenum, RHD			**A117P0042F**	1
02	Actuator, distribution flaps			**A117M6052S**	1
03	Hose, heater to plenum, insulated			**A124P0025F**	1
04	Hose Insulation Sleeve, heater to plenum		Gulf states	**A120P0161F**	1
05	Fresh Air Filter Housing Assemby		Gulf states	**A120P0159F**	1
06	Filter Fresh Air		Gulf states	**A120P0160H**	1

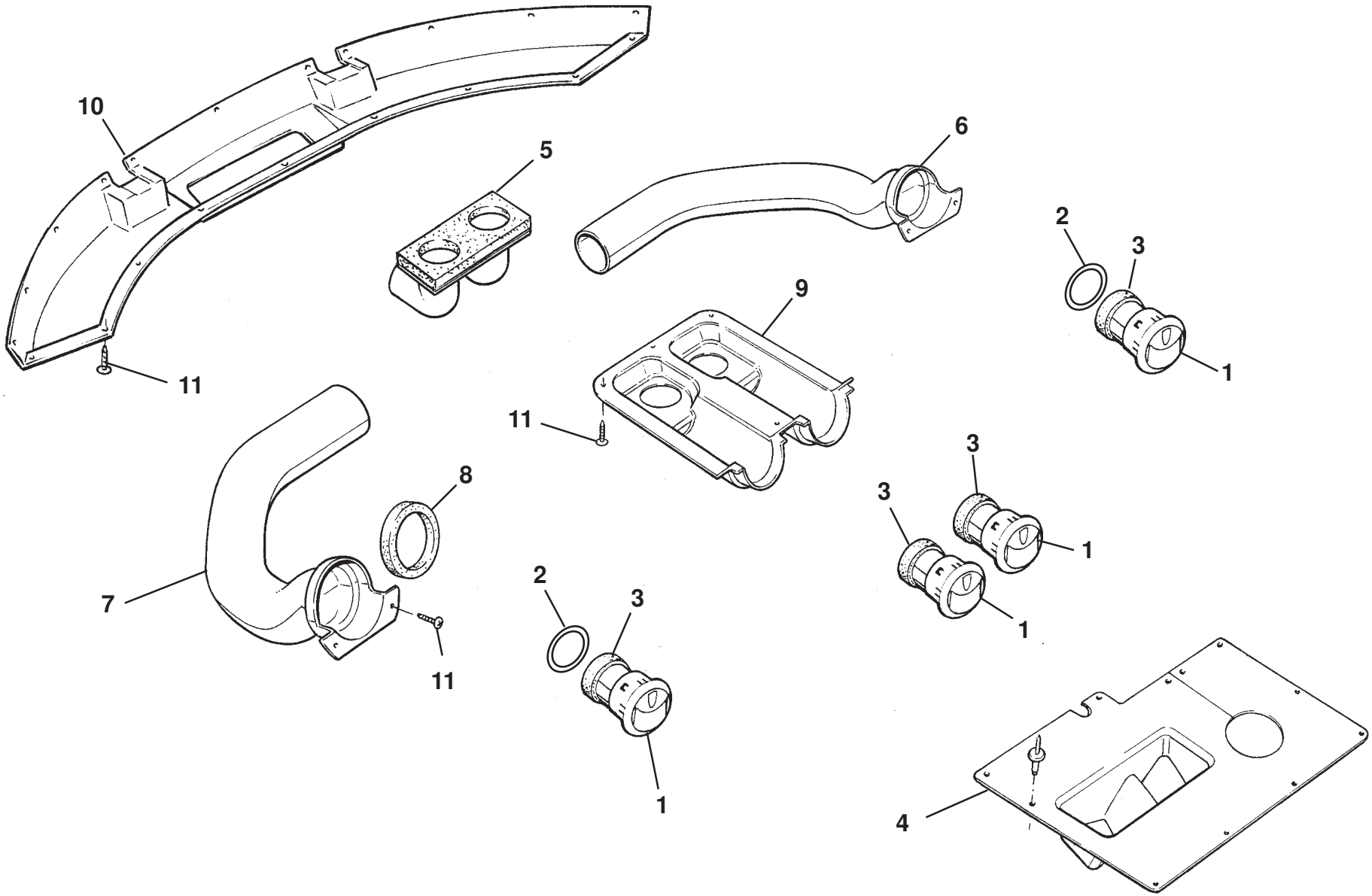

ELISE

18.13

Function Code 18.13 Air Trunking, Ducts & Ventilators

Dep	Part Description	Remarks	Option	Part Number	Qty
01	Face Level Vent			**A117U6003F**	4
02	Retaining Ring, FLV			**A117P0086F**	2
03	Foam Seal, self adhesive, 10 x 6mm, FLV to adaptor			**A100B0431V**	0.8m
04	Deflector, footwell, RHD			**A120P0016F**	1
04a	Deflector, footwell, LHD			**A120P0017F**	1
05	Duct, intermediate, FLV centre	Includes foam gaskets		**A121U0029F**	1
06	Duct, side FLV, RH			**A121U0028F**	1
07	Duct, side FLV, LH			**A121U0027F**	1
08	Gasket, FLV			**A121V0006H**	4
09	Duct, FLV centre			**B121P0002H**	1
10	Duct, air distribution, demist	P/O fascia top panel assy.		**A121P0001H**	1
11	Screw, self tap., No.10 x 3/4", ducts to panels			**A075W5040Z**	28

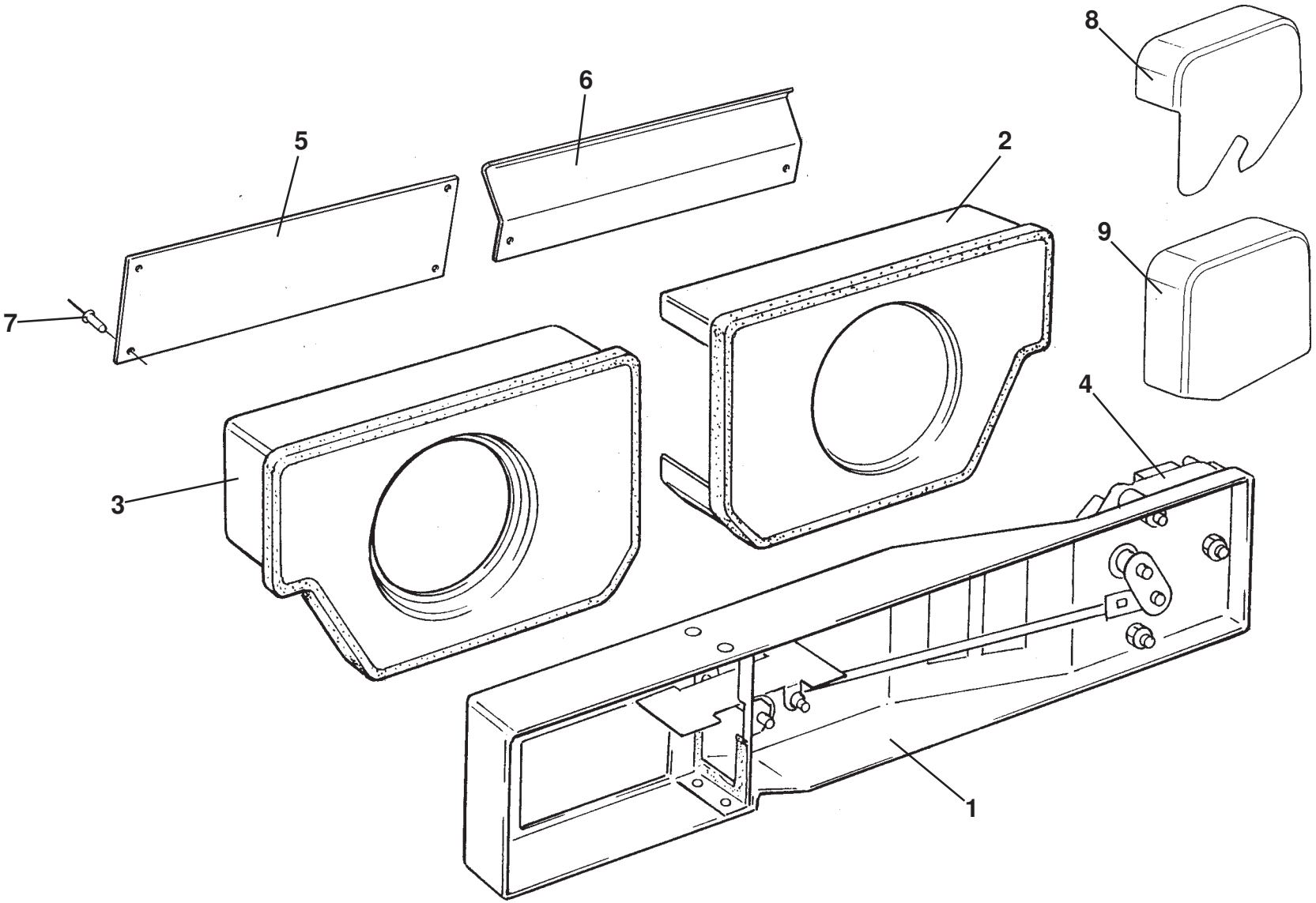

ELISE

18.14

Function Code 18.14 AC Air Recirculation System

Dep	Part Description	Remarks	Option	Part Number	Qty
01	Intake Duct/Fresh Air Flap Assembly, LHD		AC cars	**A117P0089F**	1
01a	Intake Duct/Fresh Air Flap Assembly, RHD		AC cars	**A117P0088F**	1
01b	Intake Duct, heater, LHD		Heater cars	**A117P0134F**	1
01c	Intake Duct, heater, RHD		Heater cars	**A117P0135F**	1
02	Recirc. Air Plenum, LH, RHD	Without aperture	AC cars	**B117P0035F**	1
02a	Recirc. Air Plenum, LH, LHD	With aperture	AC cars	**B117P0037F**	1
02b	Recirc. Air Plenum, LH, GCC	Not illustrated	Gulf states	**A120P0172F**	1
03	Recirc. Air Plenum, RH, RHD	With aperture	AC cars	**B117P0036F**	1
03a	Recirc. Air Plenum, RH, LHD	Without aperture	AC cars	**B117P0038F**	1
03b	Recirc. Air Plenum, RH, GCC	Not illustrated	Gulf states	**A120P0173F**	1
04	Actuator, fresh air flap		AC cars	**A117M6052S**	1
05	Blanking Panel, alloy	Driver footwell	AC cars	**A117P0123F**	1
06	Deflector Panel, alloy	Passenger footwell	AC cars	**A117P0126F**	1
07	Pop Rivet, panels to chassis		AC cars	**A111W6613F**	6
08	Cover, actuator, RHD		AC cars	**A117P0159K**	1
09	Cover, actuator, LHD		AC cars	**A117P0160K**	1

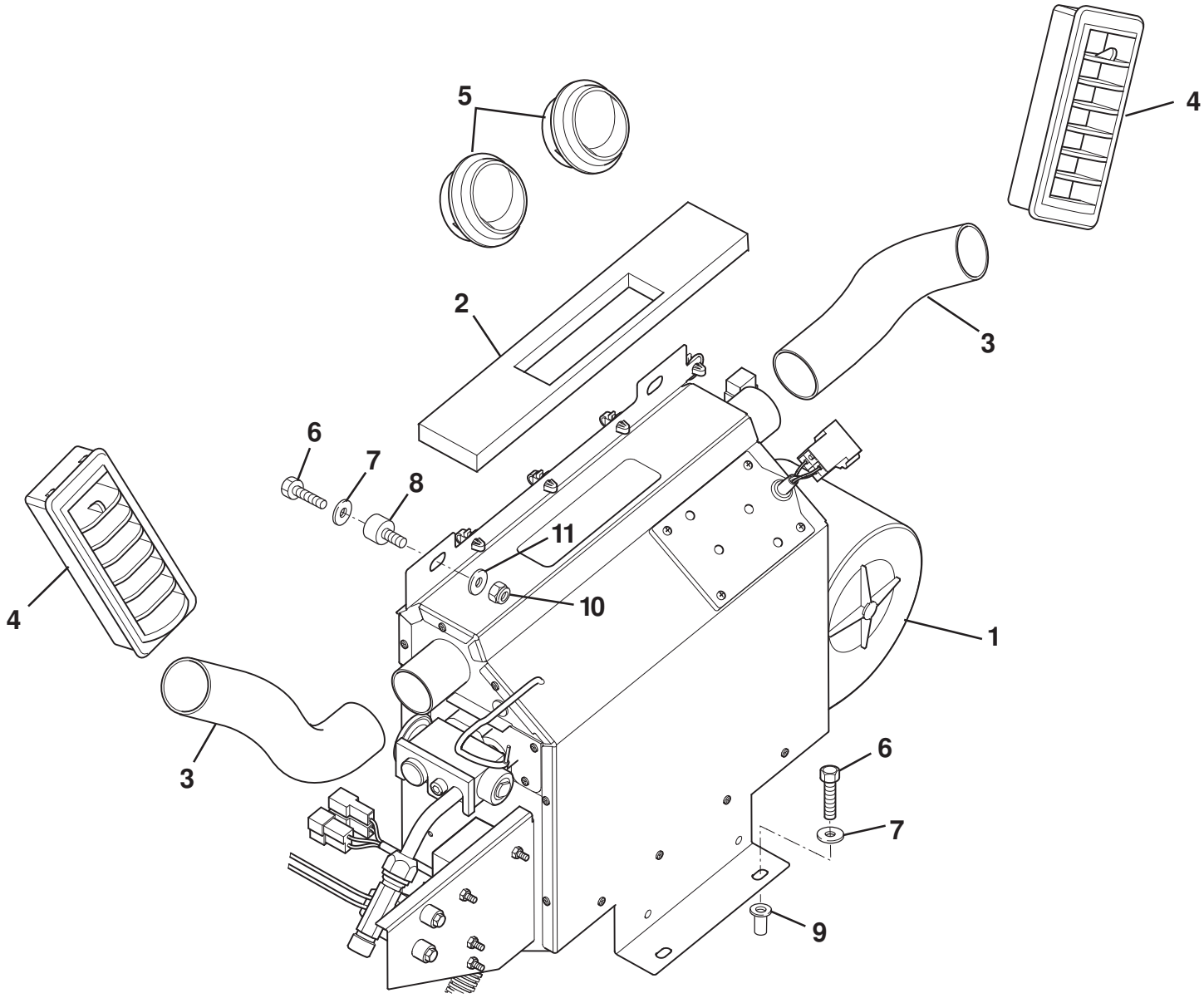

ELISE

18.15

Function Code 18.15 Auxillary AC Unit

Dep	Part Description	Remarks	Option	Part Number	Qty
01	Auxillary AC Assembly		1ZR,2ZR Gulf States	**A120P0186F**	1
02	Seal, auxillary top vent to bulkhead trim		Gulf States	**A120P0178F**	1
03	Pipe, insulation, aux HVAC to bulk head vents		Gulf States	**A120P0167F**	2
04	Grille Vent, rectangle		Gulf States	**A120P6009F**	2
05	Grille Vent, round		Gulf States	**A120P6010F**	2
06	Setscrew M6 x 12			**A075W1027Z**	4
07	Washer 6 x 20 2.5			**A075W4016Z**	4
08	Bobbin Rubber M6			**A082J6177F**	2
09	Rawlnut M6			**A075W6140F**	2
10	Nyloc Nut, M6, bobbin fix.			**A075W3009Z**	2
11	Washer, flat, M6 x 15, bobbin to bracket			**A075W4015Z**	2

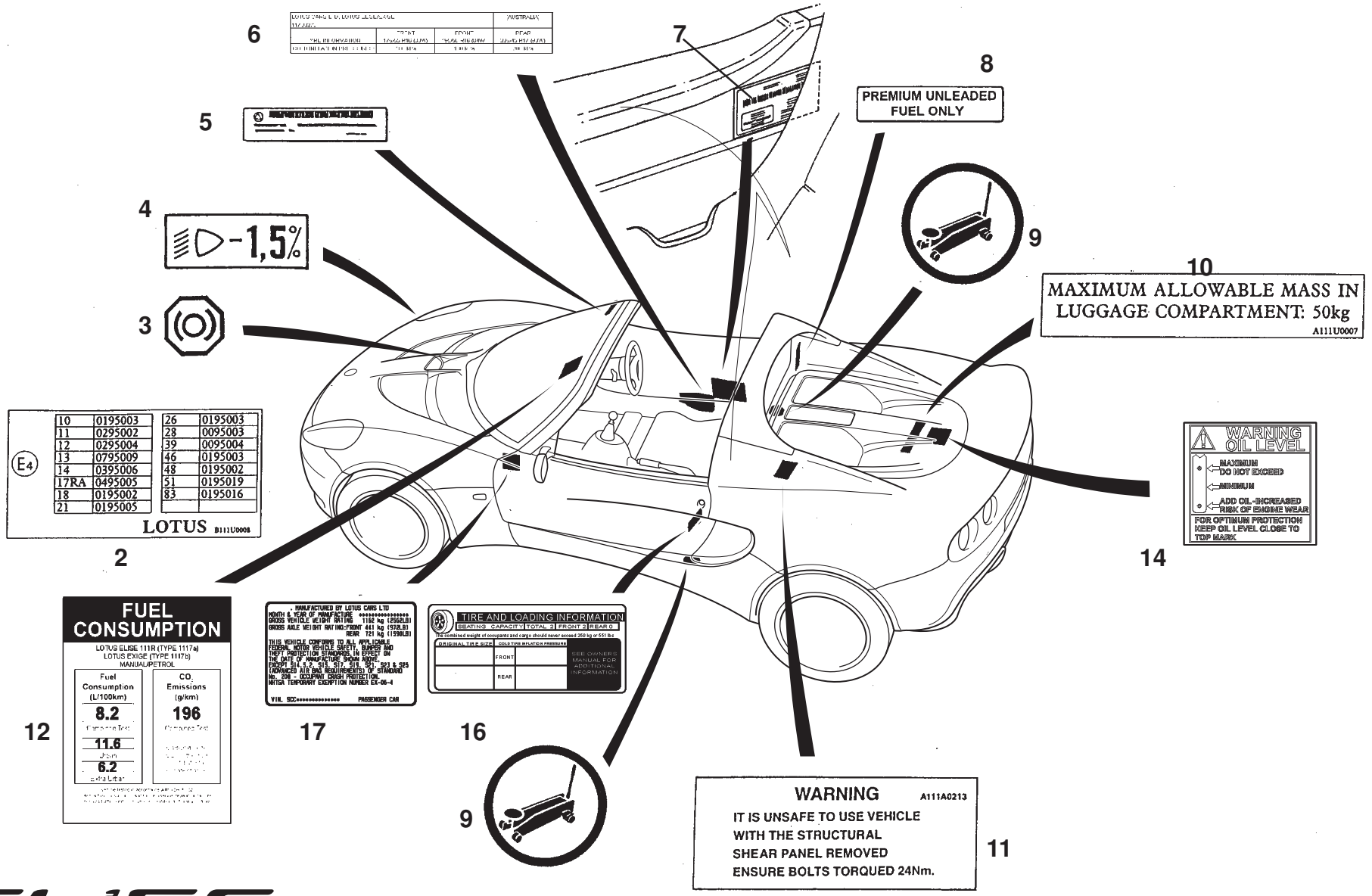
6
AUSTRALIA
7
8
PREMIUM UNLEADED
FUEL ONLY
5
4
-1,5%
9
10
MAXIMUM ALLOWABLE MASS IN
LUGGAGE COMPARTMENT: 50kg
A111U0007
3
E4
10 0195003
11 0295002
12 0295004
13 0795009
14 0395006
17RA 0495005
18 0195002
21 0195005
26 0195003
28 0095003
39 0095004
46 0195003
48 0195002
51 0195019
83 0195016
LOTUS B111U0008
2
WARNING
OIL LEVEL
MAXIMUM
DO NOT EXCEED
MINIMUM
ADD OIL - INCREASED
RISK OF ENGINE WEAR
FOR OPTIMUM PROTECTION
KEEP OIL LEVEL CLOSE TO
TOP MARK
14
FUEL
CONSUMPTION
LOTUS ELISE 111R (TYPE 1117a)
LOTUS EXIGE (TYPE 1117b)
MANUAL/PETROL
Fuel Consumption (L/100km)
8.2
11.6
6.2
CO2 Emissions (g/km)
196
12
MANUFACTURED BY LOTUS CARS LTD
MONTH & YEAR OF MANUFACTURE
GROSS VEHICLE WEIGHT RATING 1162 kg (2562LB)
GROSS AXLE WEIGHT RATING:FRONT 441 kg (972LB)
REAR 721 kg (1590LB)
THIS VEHICLE CONFORMS TO ALL APPLICABLE
FEDERAL MOTOR VEHICLE SAFETY, BUMPER AND
THEFT PROTECTION STANDARDS, IN EFFECT ON
THE DATE OF MANUFACTURE SHOWN ABOVE
EXCEPT S14, S19, S13, S17, S18, S21, S23 & S25
(ADVANCED AIR BAG REQUIREMENTS) OF STANDARD
No. 208 - OCCUPANT CRASH PROTECTION.
NHTSA TEMPORARY EXEMPTION NUMBER EX-06-4
VIN. SCC PASSENGER CAR
17
TIRE AND LOADING INFORMATION
SEATING CAPACITY TOTAL 2 FRONT 2 REAR 0
The combined weight of occupants and cargo should never exceed 250 kg or 551 lbs
ORIGINAL TIRE SIZE
COLD TIRE INFLATION PRESSURE
FRONT
REAR
SEE OWNERS MANUAL FOR ADDITIONAL INFORMATION
16
9
WARNING A111A0213
IT IS UNSAFE TO USE VEHICLE
WITH THE STRUCTURAL
SHEAR PANEL REMOVED
ENSURE BOLTS TORQUED 24Nm.
11

ELISE

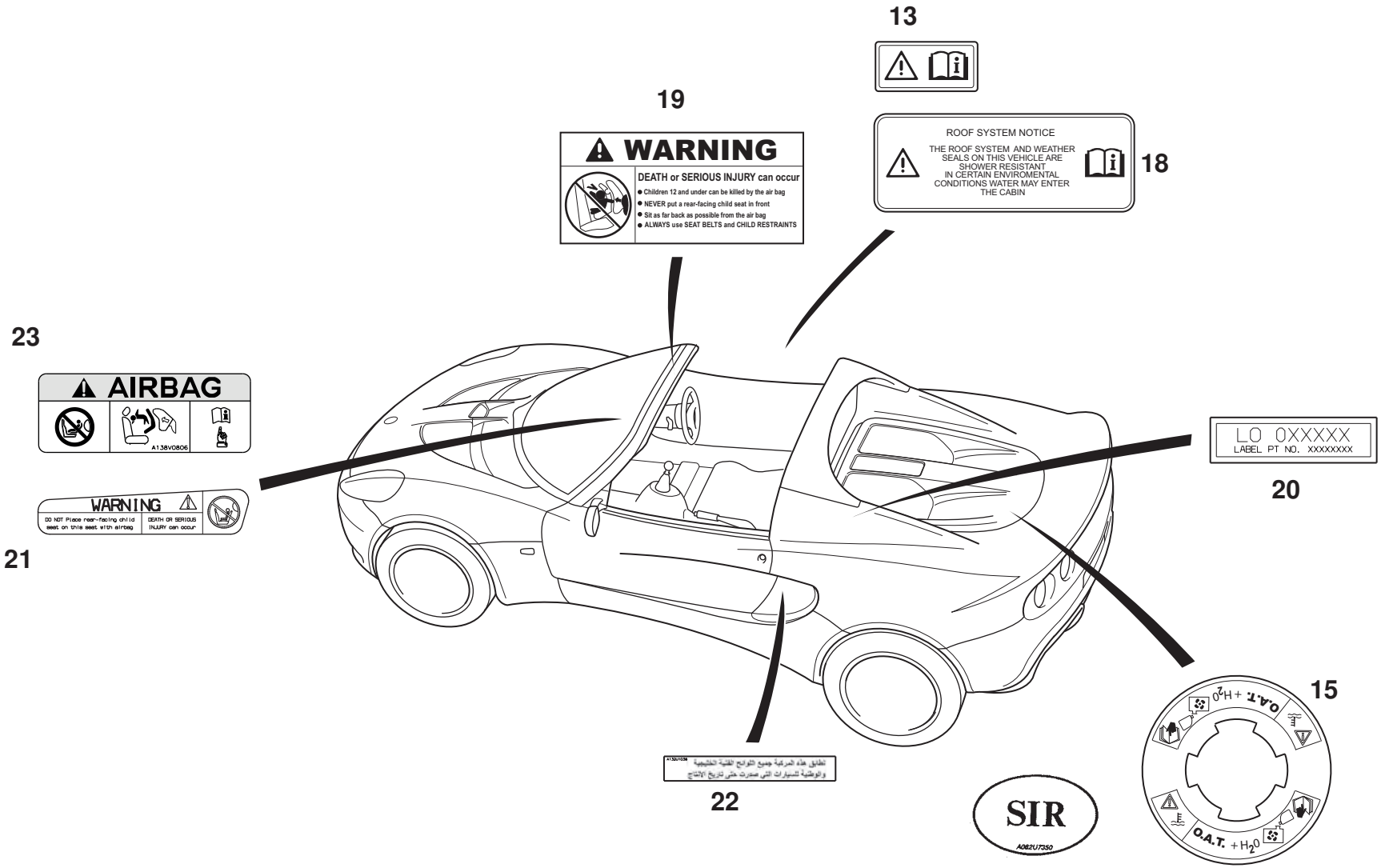

ELISE

19.01 page2

Updated 4th September2017

Function Code 19.01 Labels,Certificates, Literature etc.

Dep	Part Description	Remarks	Option	Part Number	Qty
01	Certificate of Conformity	Contact Lotus Type Approval	All models/markets	**Not listed**	1
02	Label, 'E' mark, on sill passenger side	Contact Lotus Type Approval		**Not listed**	1
03	Label, brake fluid warning			**A082U7623F**	1
04	Label, headlamp levelling, 1.5%	Beneath headlamp covers	Europe	**B082U7039F**	2
05	Label, VIN number, windscreen	Special order only, see LSL632		**C121U0121K**	1
05a	Plate, windscreen VIN label			**A121U0133F**	1
06	Label, tyre loading	On inner sill	Australia	**E117U0273F**	1
06	Label, tyre loading, b/w 1ZR	On inner sill	Australia	**A120U0168F**	1
06a	Label, tyre loading, colour 1ZR	On door	Australia	**A120U0214F**	1
06b	Label, tyre loading, colour 2ZR	On door	Australia	**A120U0215F**	1
07	Label, VIN	Special order only, see LSL632		**F075U1186K**	1
08	Label, premium unleaded fuel			**A082U7800F**	1
09	Label, jacking point			**A111U0239F**	2
10	Label, luggage loading			**B111U0007F**	1
10a	Label, luggage loading	Arabic text, Not illustrated	Gulf States	**A120U0130F**	1
11	Label, shear panel warning			**A111A0213F**	2
12	Label, fuel consumption, 1ZR	On windscreen	Australia	**A120U0167F**	1
12a	Label, fuel consumption, 2ZR	On windscreen	Australia	**A120U0212F**	1

Function Code 19.01 Labels,Certificates, Literature etc.

Dep	Part Description	Remarks	Option	Part Number	Qty
12b	Label, fuel consumption, 2ZR	On windscreen	250 Australia	**A120U0274F**	1
13	Label, hard top instruction directive	On hard top inner		**B116V0185F**	1
14	Label, oil level warning 1ZR, 2ZR	On engine cover		**A132U0460F**	1
15	Label, coolant, OAT	On header tank		**A117K6002F**	1
16	Label, tyre placard Yokohama AD07 GCC	On LH 'B' post, Arabic text	Gulf States	**A120U0128F**	1
16a	Label, tyre placard, Yokohama A048 GCC	On LH 'B' post, Arabic text	Gulf States	**A120U0129F**	1
17	Label, certification	On LH 'B' post, Special order only	Gulf States	**B120U0132K**	1
18	Label, water ingress	On Drivers cantrail		**A121U0054F**	1
19	Label, child seat inner GCC	On sunvisor, Arabic text	Gulf States	**A120U0131F**	1
20	Label, ECM 1ZR, blue green		Elise	**A120E0111F**	1
20a	Label, ECM 2ZR, light grey		Elise S	**A120E0165F**	1
20b	Label, ECM 2ZR 250, light blue		250 cup	**A704E0016F**	1
21	Label, child seat warning RH, LHD	On sunvisor, for car without sunvisors see 12.05a item 35		**B124U0094F**	1
21a	Label, child seat warning LH, RHD	On sunvisor, for car without sunvisors see 12.05a item 35		**B124U0095F**	1
22	Label GCC compliance	On LH 'B' post,	Gulf States	**A132U1038F**	1
23	Label, airbag warning	Cars without sunvisors on windscreen surround		**A138V0806F**	1
23a	Label, airbag warning	Cars without sunvisors on hardtop header trim		**D132U0315F**	1

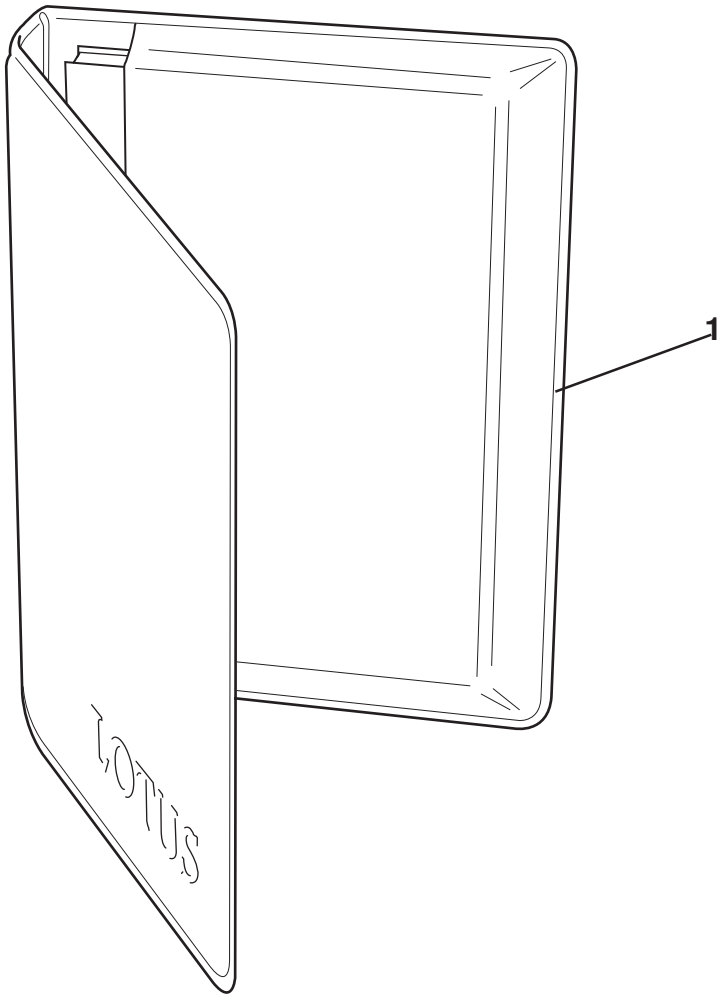

ELISE

19.03

Service Parts List ELISE

Function Code 19.03 Owner's Handbooks & Service Notes Manuals

Dep	Part Description	Remarks	Option	Part Number	Qty
01	Owner's Handbook, English	Includes maintenance record	11 MY	**D120T0324J**	1
01a	Owner's Handbook, English	Includes maintenance record	12 MY up to 15 MY	**F120T0324J**	1
01b	Owner's Handbook, English	Includes maintenance record	16 MY up to 17.5 MY	**G120T0324J**	1
01c	Owner's Handbook, English	Includes maintenance record	17.5 MY up to Vin JH_11049	**H120T0324J**	1
01d	Owner's Handbook, English	Includes maintenance record	From Vin JH_11049	**J120T0324J**	1
01e	Owner's Handbook, French	Includes maintenance record	11 MY	**B120T0324JF**	1
01f	Owner's Handbook, French	Includes maintenance record	12 MY up to 15 MY	**E120T0324JF**	1
01g	Owner's Handbook, French	Includes maintenance record	16 MY up to 17.5 MY	**G120T0324JF**	1
01h	Owner's Handbook, French	Includes maintenance record	17.5 MY up to Vin JH_11049	**H120T0324JF**	1
01i	Owner's Handbook, French	Includes maintenance record	From Vin JH_11049	**J120T0324JF**	1
01j	Owner's Handbook, German	Includes maintenance record	11 MY	**B120T0324JD**	1
01k	Owner's Handbook, German	Includes maintenance record	12 MY up to 15 MY	**E120T0324JD**	1
01l	Owner's Handbook, German	Includes maintenance record	16 MY up to 17.5 MY	**G120T0324JD**	1
01m	Owner's Handbook, German	Includes maintenance record	17.5 MY up to Vin JH_11049	**H120T0324JD**	1
01n	Owner's Handbook, German	Includes maintenance record	From Vin JH_11049	**J120T0324JD**	1
01o	Owner's Handbook, Italian	Includes maintenance record	11 MY	**B120T0324JI**	1
01p	Owner's Handbook, Italian	Includes maintenance record	12 MY up to 15 MY	**E120T0324JI**	1
01q	Owner's Handbook, Italian	Includes maintenance record	16 MY up to 17.5 MY	**G120T0324JI**	1

Function Code 19.03 Owner's Handbooks & Service Notes Manuals

Dep	Part Description	Remarks	Option	Part Number	Qty
01r	Owner's Handbook, Italian	Includes maintenance record	17.5 MY up to Vin JH_11049	**H120T0324JI**	1
01s	Owner's Handbook, Italian	Includes maintenance record	From Vin JH_11049	**J120T0324JI**	1
01t	Owner's Handbook, GCC	Includes maintenance record	11 MY	**E121T0324JAR**	1
01u	Owner's Handbook, GCC	Includes maintenance record	12 MY onwards	**E120T0324JAR**	1
01v	Maintenance Record	P/O item 01		**B120T0324M**	1
01w	Maintenance Record	P/O item 01a-01d		**H120T0324JM**	1
02	Service Notes	For 1ZR, 2ZR see Dealer Portal only			1
03	Service Parts List	For 1ZR, 2ZR see Dealer Portal only			1
04	Workshop Manual, engine & transmission	CD	1ZR	**T000T1523F**	1
04a	Workshop Manual, engine & transmission	CD	2ZR	**T000T1530F**	1
05	Labour Times Schedule	Dealer Portal only		**A120T0328J**	1
06	Elise Club Racer Supplement	Insert in handbook pack	11 MY Elise Club Racer	**LSL586**	1
07	Maintenance Schedule Pack (25)	Download from Dealer Portal as req.	LSL460 R/B	**Dealer Portal**	1
08	PDI Form Pack (25)	Download from Dealer Portal as req.	LSL345C R/B	**Dealer Portal**	1

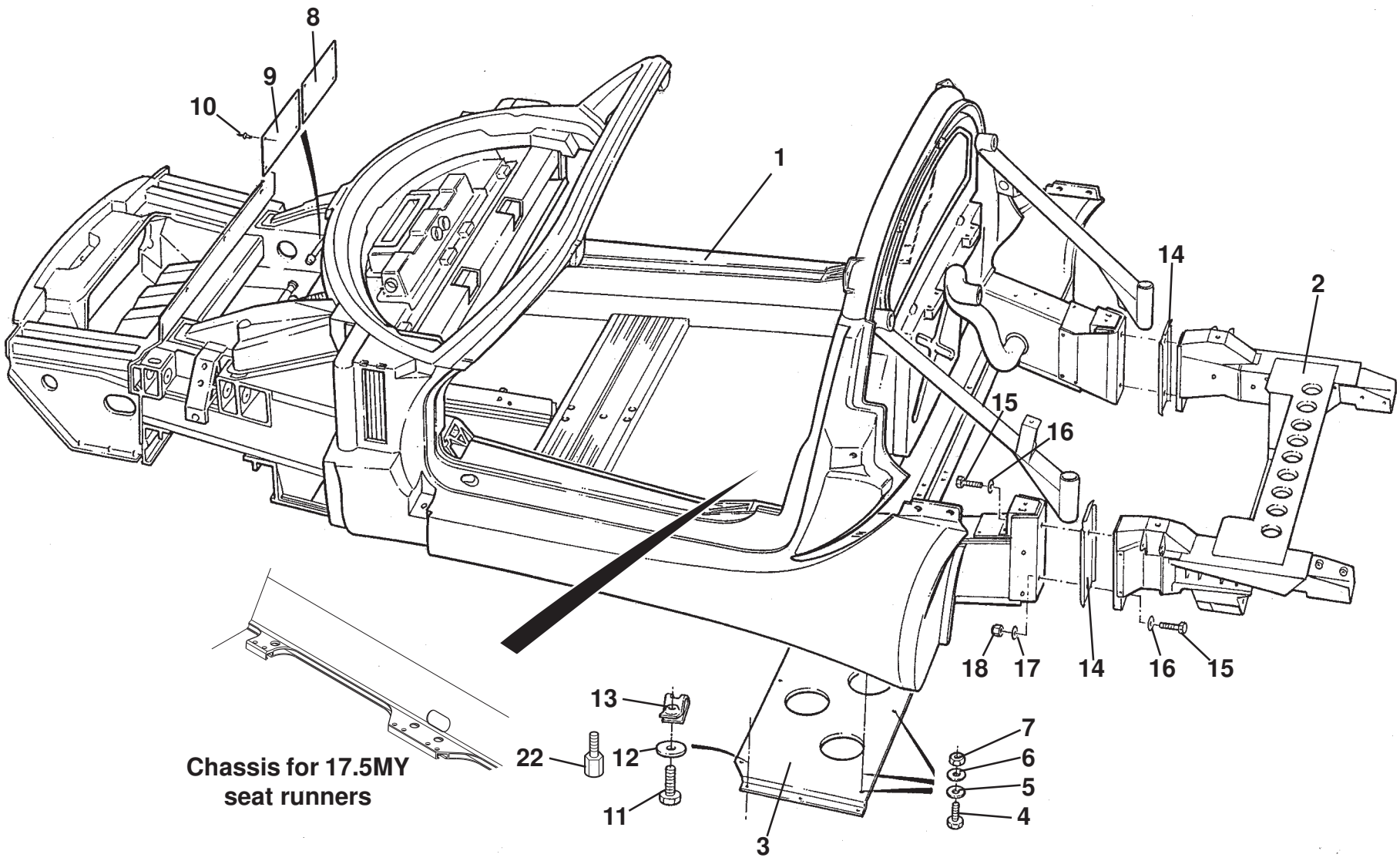

ELISE

30.01

Updated 4th December2017

Function Code 30.01 Chassis, Subframes

Dep	Part Description	Remarks	Option	Part Number	Qty
01	Partial Body Assembly, heater, LHD*	Includes subframe	1ZR	**A120A4023S**	1
01a	Partial Body Assembly, heater, RHD*	Includes subframe	1ZR	**A120A4024S**	1
01b	Partial Body Assembly, AC, LHD*	Includes subframe/AC pipes	1ZR	**A120A4025S**	1
01c	Partial Body Assembly, AC, RHD*	Includes subframe/AC pipes	1ZR	**A120A4026S**	1
01d	Partial Body Assembly, heater, LHD*	Includes subframe	1ZR, Vin HH__1438 & from Vin HH__1457 on		1
01e	Partial Body Assembly, heater, RHD*	Includes subframe	1ZR, Vin HH__1438 & from Vin HH__1457 on		1
01f	Partial Body Assembly, AC, LHD*	Includes subframe/AC pipes	1ZR, Vin HH__1438 & from Vin HH__1457 on		1
01g	Partial Body Assembly, AC, RHD*	Includes subframe/AC pipes	1ZR, Vin HH__1438 & from Vin HH__1457 on		1
01h	Partial Body Assembly, heater, LHD man, Supercharged*	Includes subframe, Oil cooler chassis pipes	2ZR	**A120A4035S**	1
01i	Partial Body Assembly, heater, RHD man, Supercharged*	Includes subframe, Oil cooler chassis pipes	2ZR	**A120A4036S**	1
01j	Partial Body Assembly, AC, LHD man, Supercharged*	Includes subframe, AC/Oil cooler chassis pipes	2ZR	**A120A4037S**	1
01k	Partial Body Assembly, AC, RHD man, Supercharged*	Includes subframe, AC/Oil cooler chassis pipes	2ZR	**A120A4038S**	1
01l	Partial Body Assembly, heater, LHD man, Supercharged*	Includes subframe, Oil cooler chassis pipes	2ZR, Vin HH__1438 & from Vin HH__1457 on		1

Function Code 30.01 Chassis, Subframes

Dep	Part Description	Remarks	Option	Part Number	Qty
01m	Partial Body Assembly, heater, RHD man, Supercharged*	Includes subframe, Oil cooler chassis pipes	2ZR, Vin HH__1438 & from Vin HH__1457 on		1
01n	Partial Body Assembly, AC, LHD man, Supercharged*	Includes subframe, AC/Oil cooler chassis pipes	2ZR, Vin HH__1438 & from Vin HH__1457 on		1
01o	Partial Body Assembly, AC, RHD man, Supercharged*	Includes subframe, AC/Oil cooler chassis pipes	2ZR, Vin HH__1438 & from Vin HH__1457 on		1
02	Rear Sub Frame, galvanised			**B120A0176F**	1
03	Shear Panel, fuel tank bay closing panel			**B120A0065F**	1
03a	Shear Panel Assembly, fuel tank bay closing panel		2ZR	**A120A0203F**	1
04	Screw, M8 x 25, hex. hd., shear panel fix			**A111W1156F**	10
05	Washer, flat, M8 x 21 x 1.6			**A111W4159F**	10
06	Washer, flat, M8 x 16.6 x 1.4			**A111W4164F**	5
07	Nyloc Nut, M8			**A907E6284F**	5
08	Blanking Panel, RH, toe board air vents		Heater cars	**A111P0490K**	1
09	Blanking Panel, LH, toe board air vents		Heater cars	**A111P0489K**	1
10	Pop Rivet, blanking panel fix			**A085W6259F**	8
11	Setscrew, M5 x 16, hex. hd., shear panel to chassis/sill	Also see 10.25		**A111W1163F**	6
12	Washer, flat, M5 x 25 x 1.4, shear panel to chassis/sill	Also see 10.25		**A082W4098F**	6
13	Spirenut, M5, shear panel to chassis/sill	Also see 10.25		**B100W6372F**	6
13	Spirenut, M5, shear panel to chassis/sill	Also see 10.25		**B100W6372F**	6
14	Shim, subframe to chassis			**A116A0076F**	2
15	Bolt M12 x 60 skt cap hd, subframe to chassis			**A138W2010F**	4

Function Code 30.01 Chassis, Subframes

Dep	Part Description	Remarks	Option	Part Number	Qty
16	Washer, flat, M12 x 23.5 x 2.3, subframe to chassis			**A075W4028Z**	4
17	Washer, flat, M12 x 24 x 1.6, subframe to chassis lower			**A075W4071F**	2
18	Nyloc Nut, M12, subframe to chassis lower			**A075W3012Z**	2
19	Grommet, blanking, unused steering column hole	Not illustrated		**A117W6783F**	1
20	Grommet, blanking, tank bay rear	Not illustrated		**A121W6755F**	1
21	Pulsert, M8, low profile S/S, subframe to undertray	Not illustrated		**A121W3211F**	1
22	Adapter, diffuser, shear panel 16mm hex			**A120A0183F**	3
		*Use order form LSL631			

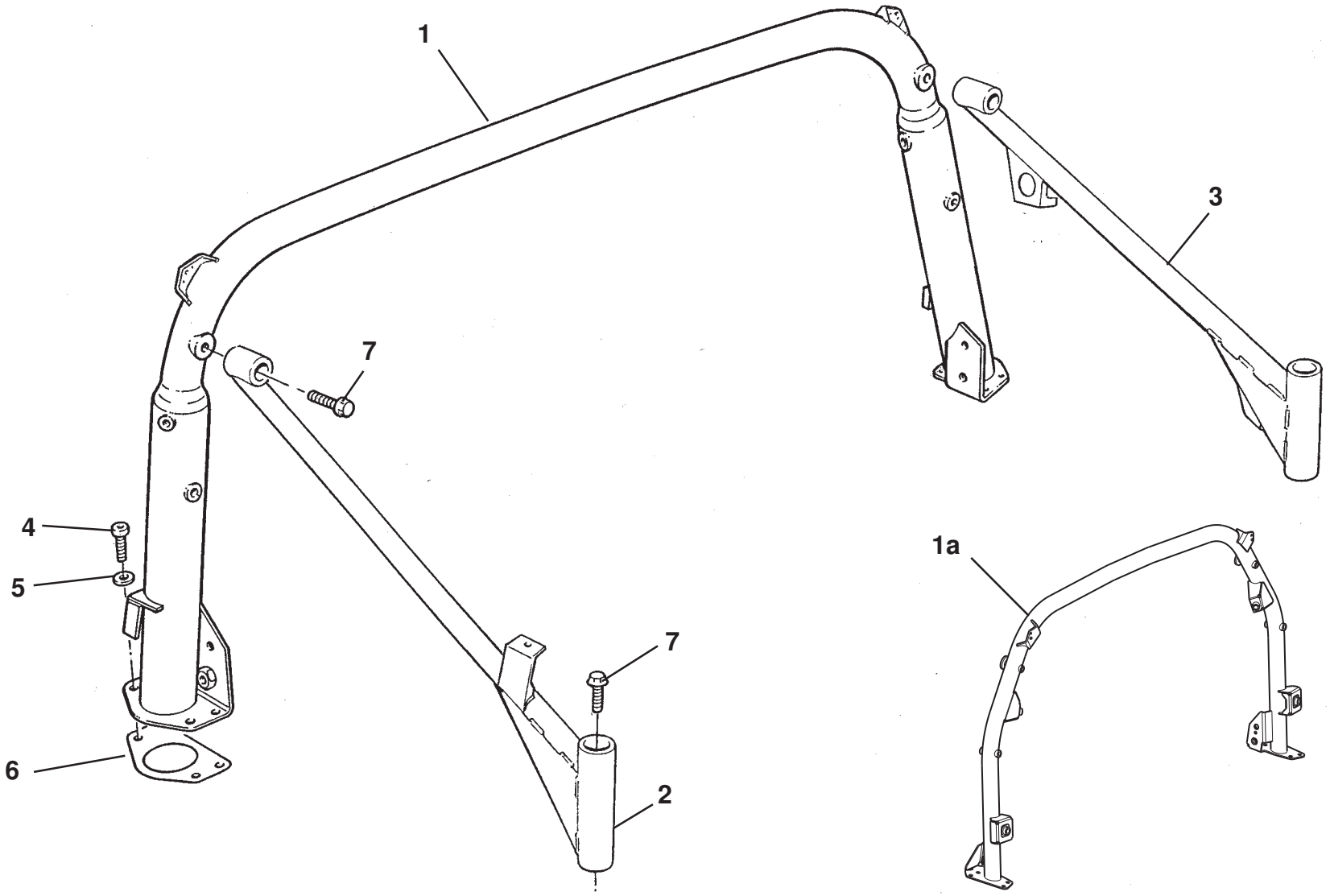

ELISE

30.02

Updated 5th February 2018

Function Code 30.02 Seat Belt Mounting Frames, Stays

Dep	Part Description	Remarks	Option	Part Number	Qty
01	Seat Belt Mounting Frame			**B117A0145F**	1
01a	Seat Belt Mounting Frame			**A120A0205F**	1
02	Backstay, frame, LH			**B120A0069F**	1
03	Backstay, frame, RH		1ZR, 2ZR	**A120A0180F**	1
04	Screw, M8 x 25, cap hd., frame to chassis			**A111W7132F**	8
05	Washer, flat, M8 x 16.6 x 1.4, frame to chassis			**A075W4020Z**	8
06	Shim, base plate 2mm			**B111A0071F**	2
06a	Shim, base plate 3mm			**A116A0164F**	2
07	Screw, M10 x 35, flg. hd., stay fixing			**A116W5247F**	4

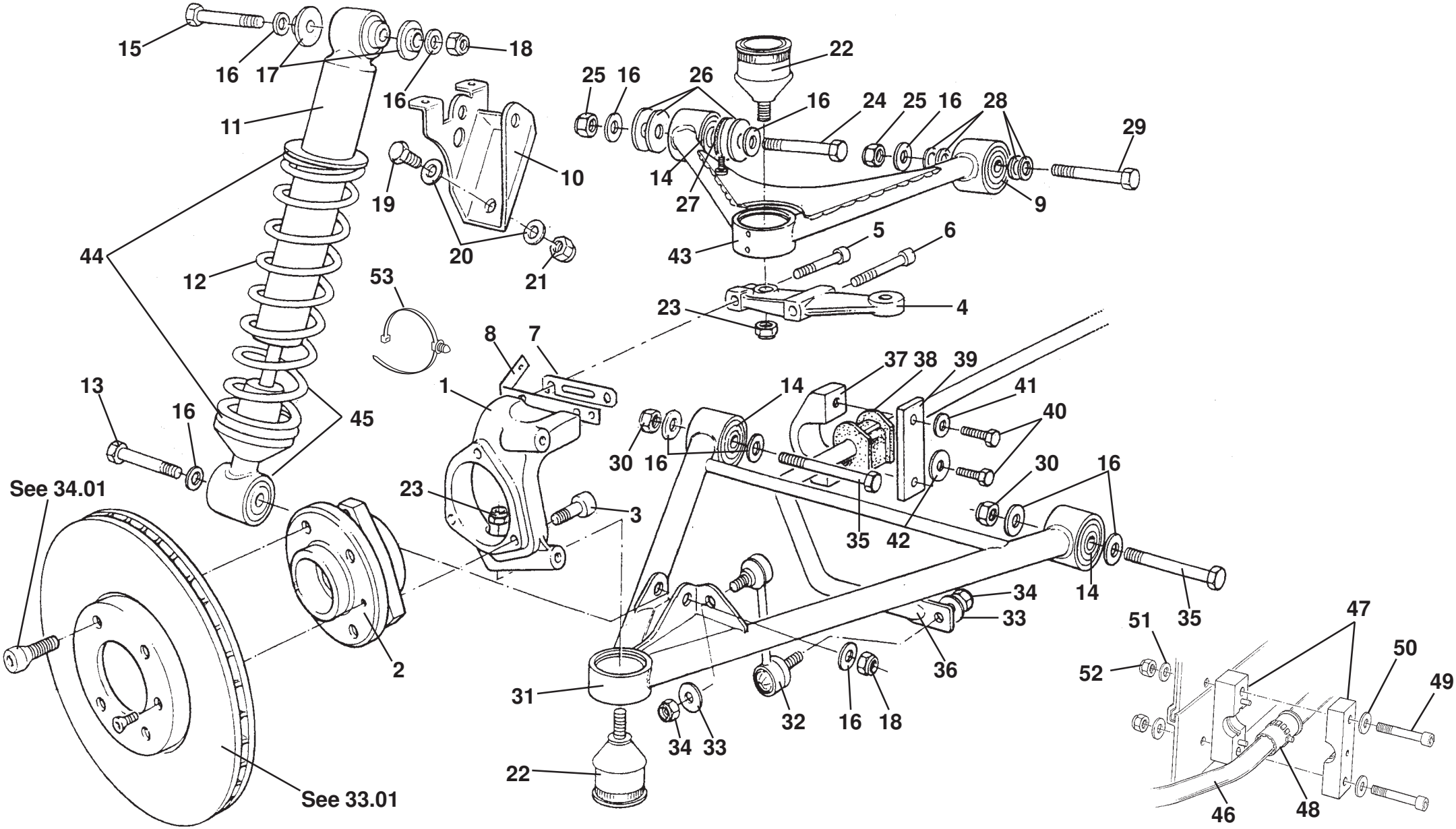
15
16
17
18
11
16
10
19
20
21
44
12
53
8
7
1
13
16
45
See 34.01
23
3
2
See 33.01
22
25
16
26
16
24
25
16
28
29
14
27
9
43
5
6
23
4
37
38
39
41
40
30
16
14
30
16
35
42
14
35
34
33
36
31
32
16
18
34
33
22
51
52
47
50
49
46
48

ELISE

31.01

Production Suspension Identity Labels

Elise/Exige 04 onwards

(Excluding early federal, Ohlins & adjustable suspensions, refer to Model History & Service Bulletin's)

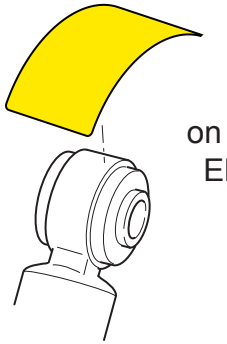

Production label
on upper damper mounting
Elise/Exige Front & Rear

Elise Base Suspension

Standard fit:-
SOP & USA from 5H_3013 up to 16MY
Elise 1ZR,2ZR Clubracer (fitted with comfort pack)
MY17.5

Front

WF

24-245098

Rear

WR

24-245104

Elise/Exige Sport Suspension

Standard fit:-
Exige (without adjustable and Ohlins suspension)
Elise Sportsracer
Elise Clark type25
Elise 72D (USA)
Elise/Exige RGB
Elise Black/White edition
Elise 1ZR,2ZR Clubracer (without comfort pack)
16MY to 17.5MY

Front

UF

F4-8E3-A677-T0

Rear

UR

F4-8E3-A678-T0

Note: if the production label is missing the ref number on the manufactures label located on the damper body has been shown to assist identification
If in doubt contact Lotus Atersales to get confirmation

Updated 3rd July 2017

Function Code 31.01 Front Suspension, Incl. Hubs

Dep	Part Description	Remarks	Option	Part Number	Qty
01	Hub Carrier, LH			**A116C0001F**	1
01a	Hub Carrier, RH			**A116C0002F**	1
02	Hub/Bearing Assembly, with wheel speed sensor		All models Kelsey Hayes ABS	**A117D6005F**	2
02a	Hub/Bearing Assembly, with wheel speed sensor	See 1701 for lead	From vin BH_10931 1ZR, 2ZR Bosch, ABS	**A120D6009F**	2
03	Screw, M12 x 45, hex. hd., hub assy. to hub carrier			**A116W2192F**	6
04	Steering Arm, LH			**A116C0003F**	1
04a	Steering Arm, RH			**A116C0004F**	1
05	Bolt, M10 x 40, 10.9G, cap hd., steering arm to hub carrier			**A117W7211F**	2
06	Bolt, M10 x 60, 10.9G, cap hd., steering arm to hub carrier			**A117W7213F**	2
07	Shim, 1mm, camber adjustment			**D111C0062F**	As req.
07a	Shim, 3mm, camber adjustment			**D111C0064F**	AS req.
08	Shim/Bracket, connector retaining, LH		Kelsey Hayes ABS only	**B116C0013F**	1
08a	Shim/Bracket, connector retaining, RH		Kelsey Hayes ABS only	**B116C0012F**	1
08b	Shim/Bracket, connector retaining, LH		From vin BH_10931 1ZR, 2ZR Bosch, ABS	**A120C4005F**	1
08c	Shim/Bracket, connector retaining, RH		From vin BH_10931 1ZR, 2ZR Bosch, ABS	**A120C4006F**	1
09	Bush, upper wishbone rear pivot	1 per wishbone		**A116C0035F**	2
10	Damper/ABS Unit Mounting Bracket, LH			**B116C0011F**	1

Function Code 31.01 Front Suspension, Incl. Hubs

Dep	Part Description	Remarks	Option	Part Number	Qty
10a	Damper/ABS Unit Mounting Bracket, RH			**B116C0010F**	1
10b	Damper/ABS Unit Mounting Bracket assy, LH, RHD, LHD		From vin BH_10931 1ZR, 2ZR Bosch, ABS	**A120C0025F**	1
11	Damper, base	See LSL656-1	Up to Vin FH _10257	**A120C0007H**	2
11a	Damper, base	See LSL656-1	From vin FH _10258	**B120C0007H**	2
11b	Damper, sport	See LSL656-1	Elise sport pack option	**A122C0007H**	2
12	Road Spring, base	See LSL656-1		**A116C0015H**	2
12a	Road Spring	See LSL656-1	Elise sport pack option	**A122C0008H**	2
13	Bolt, M10 x 55, hex. hd., damper bottom fix.			**A079W2057F**	2
14	Bush, lower wishbone/upper wishbone front pivots	Replace in car sets		**A116C0068F**	6
15	Bolt, M10 x 70, hex. hd., damper top fix.			**A075W2058Z**	2
16	Washer, flat, M10 x 21 x 2	Black finish		**B111W4163F**	22
17	Spacer, damper to top mounting bracket			**A111C0061F**	4
18	Nyloc Nut, M10, damper fixings			**A100W3112F**	4
19	Bolt, M8 x 25, hex, hd., bracket to chassis			**A111W1156F**	4
20	Washer, flat, M8 x 16.5 S/S, bracket to chassis			**A111W4175F**	4
21	Nyloc Nut, M8, bracket to chassis			**A075W3010Z**	4
22	Ball Joint			**B111C6012F**	4
23	Nyloc Nut, M12 x 1.5, ball joint			**A100C6019F**	2
24	Pivot Bolt, M10 x 80, hex. hd., wishbone upper front			**A075W2061Z**	2
25	Nyloc Nut, M10, wishbone upper to chassis			**A100W3112F**	4

Function Code 31.01 Front Suspension, Incl. Hubs

Dep	Part Description	Remarks	Option	Part Number	Qty
25a	Nut M10 hex flg, wishbone fixings	Alternative to item 25	1ZR, 2ZR	**A138W3006F**	4
26	Shim, castor adjustment			**A111C0077F**	6
27	Snubber Washer, rubber coated, upper wishbone			**A111C0081F**	2
28	Shim, castor adjustment, small			**A111C0080F**	8
29	Pivot Bolt, M10 x 75mm, hex. hd., wishbone upper rear			**A075W2059Z**	2
30	Nyloc Nut, M10, wishbone lower to chassis fix			**A100W3112F**	4
30a	Nut M10 hex flg, wishbone fixings	Alternative to item 30	1ZR, 2ZR	**A138W3006F**	4
31	Wishbone Assembly, lower, LH	Includes balljoint & bushes		**A117C0035J**	1
31a	Wishbone Assembly, lower, RH	Includes balljoint & bushes		**A117C0034J**	1
32	Anti-Roll Bar Drop Link			**A111C0063F**	2
33	Washer, flat, M10 x 24 x 1.5, drop link fix			**A075W4023F**	4
34	Nyloc Nut, M10 x 1.25, drop link fix			**A111W3152F**	4
35	Pivot Bolt, M10 x 85, hex. hd., wishbone lower			**A079W2063F**	4
36	Anti-Roll Bar, black	See LSL656-1		**A120C0023F**	1
37	Clamp Bracket, A/R bar			**A111C0107F**	2
38	Pivot Bush, rubber, A/R bar.			**A111C0094F**	2
39	Spacer Plate, A/R bar fixing			**A111C0109F**	2
40	Screw, M8 x 30, skt. cap hd., A/R bar clamp brkt. fix.			**A117W7215F**	4
41	Washer, flat, M8 x 16.5 x 1.6, S/S brkt. to chassis upper			**A111W4175F**	2
42	Washer, flat, M8 x 25 x 1.5, S/S, bracket to chassis lower			**B075W4021Z**	2
43	Wishbone Assembly, upper, LH	Includes balljoint & bushes		**A117C0029J**	1

Function Code 31.01 Front Suspension, Incl. Hubs

Dep	Part Description	Remarks	Option	Part Number	Qty
43a	Wishbone Assembly, upper, RH	Includes balljoint & bushes		**A117C0030J**	1
44	Damper Collar & Clip Kit	Upper/lower collars + circlip		**A120C6003S**	2
45	Spring/Damper Assembly, base	See LSL656-1	Up to Vin FH_10257	**A120C0005F**	2
45a	Spring/Damper Assembly, sport	See LSL656-1	Elise sport pack option	**A122C0006F**	2
46a	Anti-Roll Bar, sport, adjustable, yellow	See LSL656-1	Optional	**A120C0024F**	1
47a	Mounting Clamp, A/R bar	Use with 46	Optional	**A120C0021F**	2
48	Bush, A/R bar pivot, '07 MY	Use with 46a	Optional	**A120C6002F**	2
49	Screw, M8 x 65, cap hd, clamp to chassis	Use with 46a	Optional	**A125W7218F**	4
50	Washer, flat, M8 x 25 x 1.5 S/S	Use with 46a clamp side & chassis lower	Optional	**B075W4021Z**	6
51	Washer, flat, M8 x 16.5 x 1.6 S/S	Use with 46a, chassis upper	Optional	**A111W4175F**	2
52	Nyloc Nut, M8, clamp to chassis	Use with 46a	Optional	**A075W3010Z**	4
53	Tie Wrap Clip, ABS sensor			**A124W6794F**	2
54	'C' Spanner, adjustable damper	Not illustrated	Optional	**A120C6001F**	1

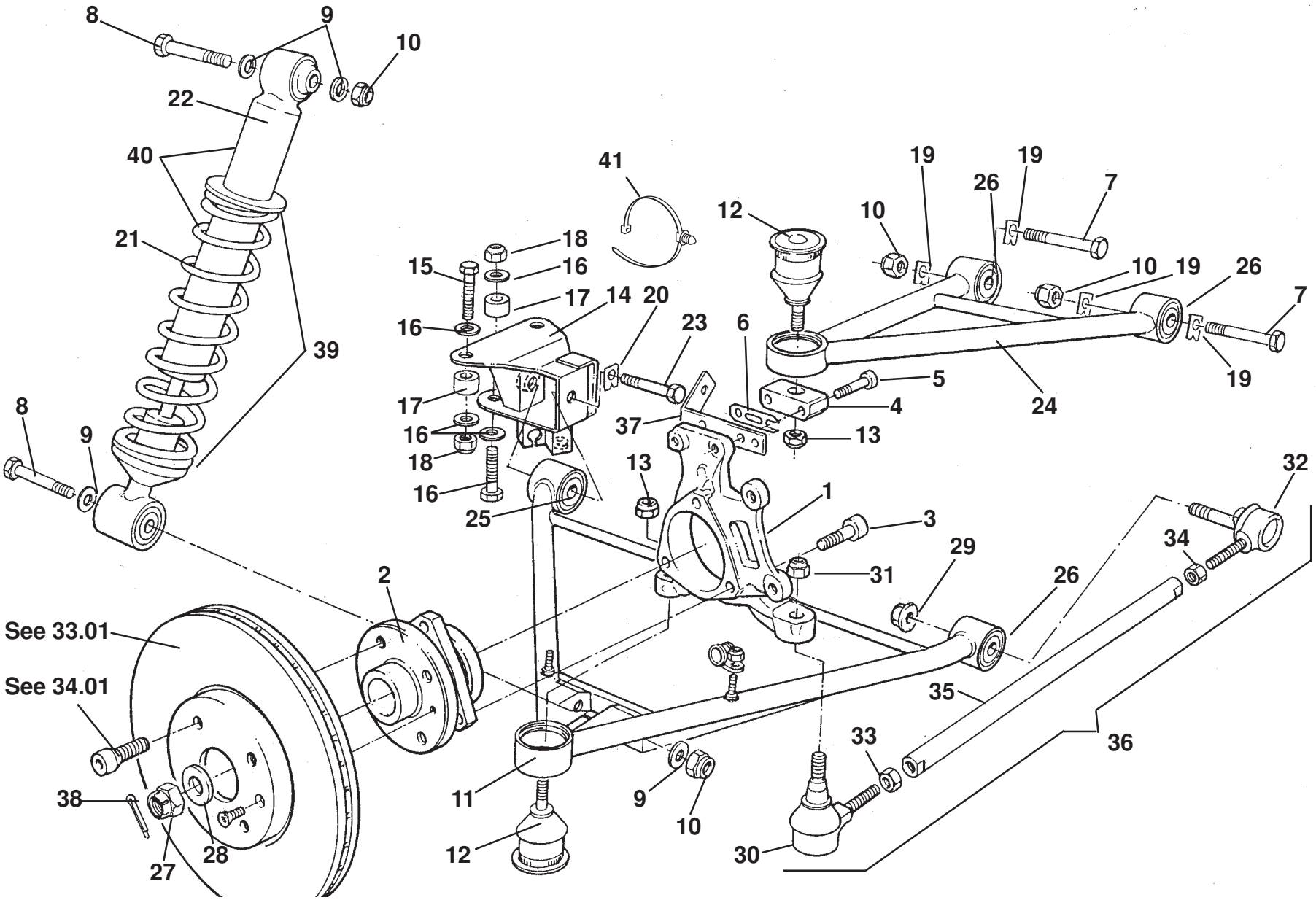
8
9
10
22
40
21
39
8
9
41
18
16
15
17
14
20
16
23
6
17
16
18
16
25
37
13
1
3
31
2
See 33.01
See 34.01
38
27
28
11
12
9
10
30
33
35
36
29
26
34
32
12
19
26
19
7
10
10
19
26
7
19
5
4
13
24

ELISE

31.03

Production Suspension Identity Labels

Elise/Exige 04 onwards

(Excluding early federal, Ohlins & adjustable suspensions, refer to Model History & Service Bulletin's)

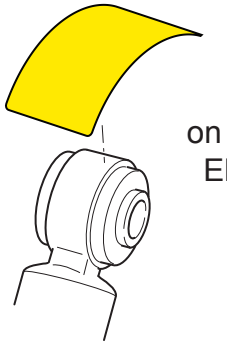

Production label
on upper damper mounting
Elise/Exige Front & Rear

Elise Base Suspension

Standard fit:-
SOP & USA from 5H_3013 up to 16MY
Elise 1ZR,2ZR Clubracer (fitted with comfort pack)
MY17.5

Front

WF

24-245098

Rear

WR

24-245104

Elise/Exige Sport Suspension

Standard fit:-
Exige (without adjustable and Ohlins suspension)
Elise Sportsracer
Elise Clark type25
Elise 72D (USA)
Elise/Exige RGB
Elise Black/White edition
Elise 1ZR,2ZR Clubracer (without comfort pack)
16MY to 17.5MY

Front

UF

F4-8E3-A677-T0

Rear

UR

F4-8E3-A678-T0

Note: if the production label is missing the ref number on the manufactures label located on the damper body has been shown to assist identification
If in doubt contact Lotus Atersales to get confirmation

Updated 3rd July 2017

Function Code 31.03 Rear Suspension, Incl. Hubs

Dep	Part Description	Remarks	Option	Part Number	Qty
01	Hub Carrier, LH			**A116D0097F**	1
01a	Hub Carrier, RH			**A116D0096F**	1
02	Hub/Bearing Assembly, with wheel speed sensor		All models Kelsey Hayes ABS	**A117D6005F**	2
02a	Hub/Bearing Assembly, with wheel speed sensor	See 1701 for lead	From vin BH_10931 1ZR, 2ZR Bosch, ABS	**A120D6009F**	2
03	Screw, M12 x 40, hex. hd., hub assy. to hub carrier			**A116W1170F**	6
04	Ball Joint Carrier			**B117D0067F**	2
05	Bolt, M10 x 50, 10.9G, cap hd., carrier to hub carrier			**A117W7212F**	4
06	Shim, camber adjustment, 1mm			**E111D0052F**	As req.
06a	Shim, camber adjustment, 1.5mm			**B120D0048F**	As req.
07	Pivot Bolt, M10 x 60, hex. hd., upper wishbone F & R			**A079W2055F**	4
08	Bolt, M10 x 55, hex. hd., damper fixing			**A079W2057F**	4
09	Washer, flat, M10 x 21 x 2, damper fixing	Black finish		**B111W4163F**	8
10	Nyloc Nut, M10, 8.8 grade, damper/upper wishbone fixing			**A100W3112F**	8
11	Wishbone Assembly, lower, LH	Includes balljoint & bushes		**C116D0081J**	1
11a	Wishbone Assembly, lower, RH	Includes balljoint & bushes		**C116D0080J**	1
12	Ball Joint			**B111C6012F**	4
13	Nyloc Nut, M12 x 1.5, balljoint			**A100C6019F**	4
14	Bracket, lower wishbone to chassis, LH			**C120D0023F**	1

Function Code 31.03 Rear Suspension, Incl. Hubs

Dep	Part Description	Remarks	Option	Part Number	Qty
14a	Bracket, lower wishbone to chassis, RH			**D120D0024F**	1
15	Bolt, M10 x 40, bracket to chassis			**A116W2206F**	8
16	Washer, flat, M10 x 21 x 2, bracket to chassis	Black finish		**B111W4163F**	8
17	Spacer, M10, bracket to chassis			**A111D0147F**	8
18	Nyloc Nut, M10, bracket to chassis			**A100W3112F**	8
19	Tab Washer, upper pivot bolts			**B116D0031F**	8
20	Tab Washer, lower front pivot bolt			**A116D0032F**	2
21	Road Spring, base	See LSL656-1		**A120D0012H**	2
21a	Road Spring, sport	See LSL656-1	Elise sport pack option	**A122D0006H**	2
22	Damper, base	See LSL656-1	Up to vin FH _10257	**A120D0011H**	2
22a	Damper, base	See LSL656-1	From vin FH _10258	**B120D0011H**	2
22b	Damper , sport	See LSL656-1	Elise sport pack option	**A122D0008H**	2
23	Pivot Bolt, M10 x 65, hex. hd., lower wishbone front			**A075W2056Z**	2
24	Wishbone Assembly, upper, LH	Includes balljoint & bushes		**B116D0085J**	1
24a	Wishbone Assembly, upper, RH	Includes balljoint & bushes		**B116D0084J**	1
25	Bush, lower wishbone front pivot (short)	2 per wishbone		**A116C0067F**	4
26	Bush, lower wishbone rear/upper wishbones			**A116C0068F**	6
27	Nut, castellated, shaft to hub			**A116D6001F**	2
28	Washer, flat, nut to shaft			**A120D6018F**	2
29	Locknut, flange, cleave, M10 x 1.25, inner toe link fixing			**A117W3189F**	2
30	Ball Joint, tapered, outer, RH thread, M10 x 1.25 x 45 stud			**A117D0089S**	2

Function Code 31.03 Rear Suspension, Incl. Hubs

Dep	Part Description	Remarks	Option	Part Number	Qty
31	Nyloc Nut, M12, balljoint to hub carrier			**A100C6019F**	2
32	Ball Joint, inner, LH thread, M10 x 1.25 x 60 stud			**A117D0090S**	2
33	Locknut, M12, RH thread, ball joint to rod			**A111W3150F**	2
34	Locknut, M12, LH thread, ball joint to rod			**A111W3149F**	2
35	Toe Link Rod			**B116D0053S**	2
36	Toe Link Assembly			**A117D0088F**	2
37	Shim/Bracket, connector retaining, LH		Kelsey Hayes ABS only	**B116C0013F**	1
37a	Shim/Bracket, connector retaining, RH		Kelsey Hayes ABS only	**B116C0012F**	1
37c	Shim/Bracket, connector retaining, LH		From vin BH_10931 1ZR, 2ZR Bosch, ABS	**A120C4005F**	1
37d	Shim/Bracket, connector retaining, RH		From vin BH_10931 1ZR, 2ZR Bosch, ABS	**A120C4006F**	1
38	Split Pin, nut to shaft			**A116D6003F**	2
39	Damper Collar & Clip Kit	Upper/lower collars + circlip		**A120C6003S**	2
40	Spring/Damper Assembly, base	See LSL656-1	Up to Vin FH_10257	**A120D0007F**	2
40a	Spring/Damper Assembly, sport	See LSL656-1	Elise sport pack option	**A122D0007F**	2
41	Tie Wrap Clip, ABS sensor			**A124W6794F**	2

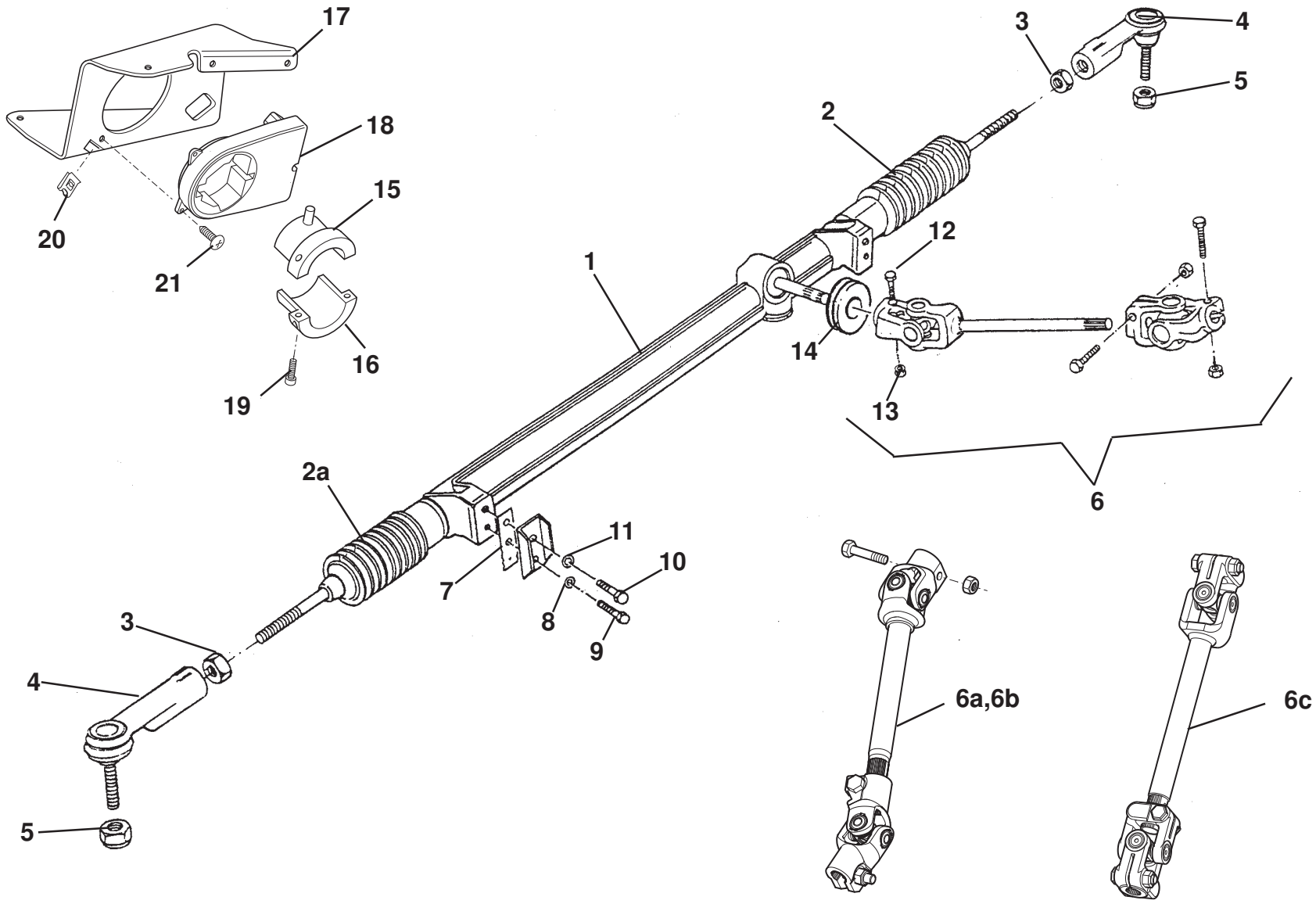

ELISE

32.01

Function Code 32.01 Rack & Pinion, & Lower Column

Dep	Part Description	Remarks	Option	Part Number	Qty
01	Steering Rack Assembly, RHD	Use seal A120H0002F		**A117H0052F**	1
01a	Steering Rack Assembly, LHD	Use seal A120H0002F		**A117H0053F**	1
02	Gaiter, steering rack, non-pinion end, dia 38mm at rack end			**A120H6004S**	1
02a	Gaiter, steering rack, pinion end, dia 45mm at rack end			**A120H6005S**	1
03	Lock Nut, M12 , track rod end to track rod			**A111W3124F**	2
04	Track Rod End/Ball Joint	Includes nut, item: 5		**A117H0009F**	2
05	Nyloc Nut, M10, track rod end to steering arm			**A111W3152F**	2
06	Intermediate Steering Shaft Assembly	Includes both universal joints		**D111H0003F**	1
06a	Intermediate Steering Shaft, Assembly RHD		1ZR, 2ZR Bosch, ABS from vin BH_10931	**A120H0011F**	1
06b	Intermediate Steering Shaft, Assembly LHD		1ZR, 2ZR Bosch, ABS from vin BH_10931	**A120H0014F**	1
06c	Intermediate Steering Shaft, Assembly		1ZR, 2ZR Bosch, ABS from vin GH_11331*	**A120H0021F**	1
07	Adjuster Plate, rack height setting (6 notch)			**A111H0017F**	2
08	Washer, flat, M8, rack mounting			**A075W4020Z**	2
09	Setscrew, M8 x 25, hex. hd., rack mounting			**A082W1110F**	2
10	Setscrew, M10 x 30, hex. hd., rack mounting			**A100A6028F**	2
11	Washer, flat, M10, rack mounting			**A075W4024Z**	2
12	Bolt, M8 x 40, hex. hd., 10.9 grade, steering shaft to U/J			**A918W2171F**	4
13	Nyloc Nut, M8, steering shaft to U/J			**A075W3010Z**	4

Function Code 32.01 Rack & Pinion, & Lower Column

Dep	Part Description	Remarks	Option	Part Number	Qty
14	Seal, steering shaft thro' bulkhead			**A120H0002F**	1
15	Collar SWA sensor upper		1ZR, 2ZR Bosch, ABS from vin BH_10931	**A120J0076F**	1
16	Collar SWA sensor lower		1ZR, 2ZR Bosch, ABS from vin BH_10931	**A120J0077F**	1
17	Bracket SWA sensor RHD		1ZR, 2ZR Bosch, ABS from vin BH_10931	**B120J4014F**	1
17a	Bracket SWA sensor RHD		1ZR, 2ZR Bosch, ABS from vin GH_11331*	**A120J4020F**	1
17b	Bracket SWA sensor LHD		1ZR, 2ZR Bosch, ABS from vin BH_10931	**B120J4013F**	1
17c	Bracket SWA sensor LHD		1ZR, 2ZR Bosch, ABS from vin GH_11331*	**A1204019F**	1
18	Sensor, steering angle		1ZR, 2ZR Bosch, ABS from vin BH_10931	**A132J0092F**	1
19	Screw M5 x 25 Socket hd cap, SWA collar		1ZR, 2ZR Bosch, ABS from vin BH_10931	**A132W7001F**	2
20	Nut Spire No 8, sensor, steering angle		1ZR, 2ZR Bosch, ABS from vin BH_10931	**A075W6016Z**	3
21	Screw No 6 flg pozi, sensor, steering angle		1ZR, 2ZR Bosch, ABS from vin BH_10931	**A075W5012F**	3
		*Note earlier vins may have part fitted			

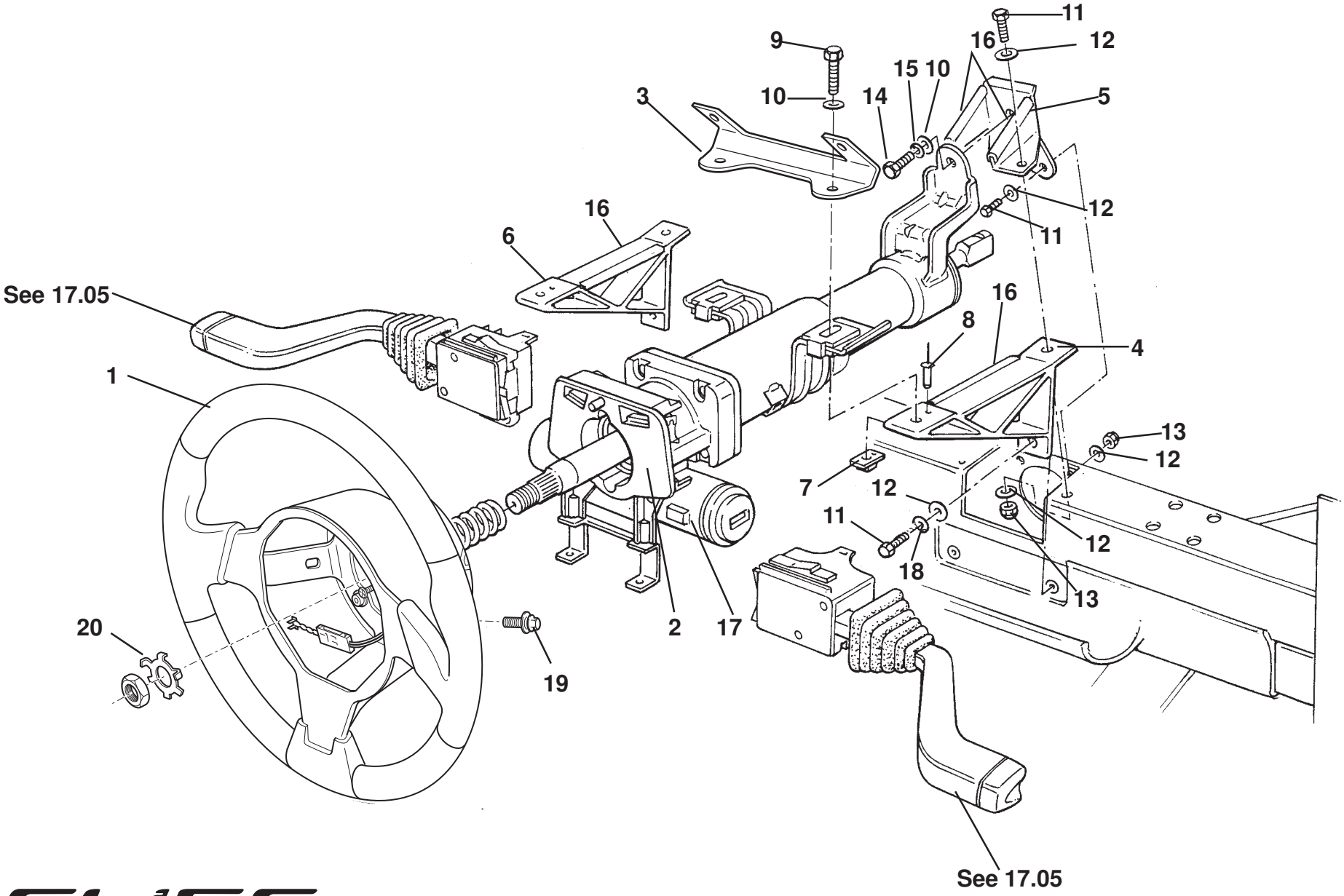

See 17.05
1
20
19
2
17
3
9
10
14
15
10
16
11
12
5
12
11
16
6
16
8
4
13
12
7
12
11
18
12
13
See 17.05

ELISE

32.05

Function Code 32.05 Upper Column, Steering Wheel

Dep	Part Description	Remarks	Option	Part Number	Qty
01	Steering Wheel Assembly, SIR, leather	Includes rotary connector	Up to 17.5 MY	**A116U0085F**	1
01a	Steering Wheel Assembly, SIR, leather and suedetex.	Includes rotary connector	Elise Club Racer 1ZR,2ZR Up to 17.5 MY	**A120U0175F**	1
01b	Steering Wheel Assembly, SIR, leather		From 17.5 MY	**A138V0013F**	1
01c	Steering Wheel Assembly, SIR, black alcantara		From 17.5 MY	**A138V0835F**	1
01d	Steering Wheel Assembly, SIR, red alcantara		From 17.5 MY	**A138V0836F**	1
02	Upper Steering Column	Includes ign. switch/steering lock		**A117H6001F**	1
03	Bracket, switch module mounting			**A121H0001F**	1
04	Column Mounting Bracket, RH			**E117U0016F**	1
05	Bracket, forward column mounting			**B111H0004F**	1
06	Column Mounting Bracket, LH			**E117U0135F**	1
07	Nutplate, upper column support			**B111H0007F**	2
08	Pop Rivet, nutplate to bracket			**A075W6092Z**	2
09	Bolt, M8 x 35, hex. hd., column to bracket			**B075W2038F**	2
10	Washer, flat, M8 x 20 x 2.5			**A079W4019F**	3
11	Setscrew, M6 x 16, side to forward brk/chassis			**A075W1028Z**	6
12	Washer, flat, M6 x 12.1 x 1.4			**A075W4013Z**	10
13	Nyloc Nut, M6			**A907E6285F**	4
14	Setscrew, M8 x 16 hex. hd., front mounting			**A075W1036Z**	1

Function Code 32.05 Upper Column, Steering Wheel

Dep	Part Description	Remarks	Option	Part Number	Qty
15	Washer, spring, M8			**A075W4036Z**	1
16	Rubber Beading, bracket edge protection			**B075U6054V**	0.3M
17	Steering Lock Housing	Excluding lock barrel, see 10.17, item 1		**A111H6003S**	1
18	Washer, spring, M6			**A075W4035Z**	2
19	Shear Bolt, steering lock			**A111H6026S**	2
20	Lock Plate, steering wheel			**A111H6009F**	1

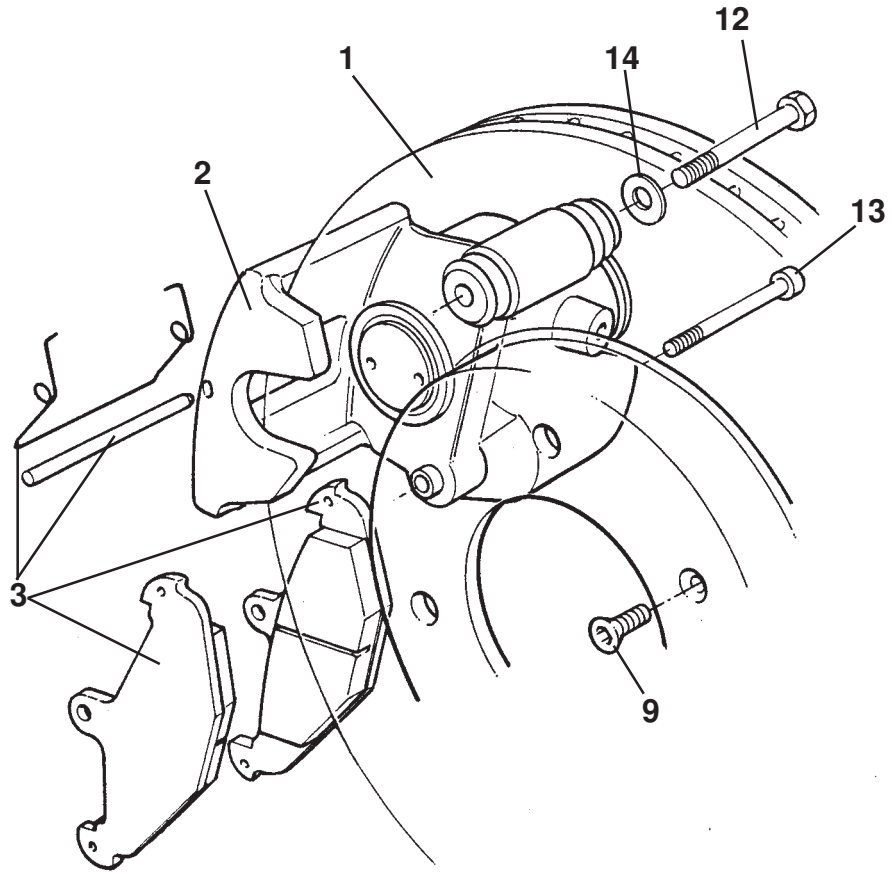

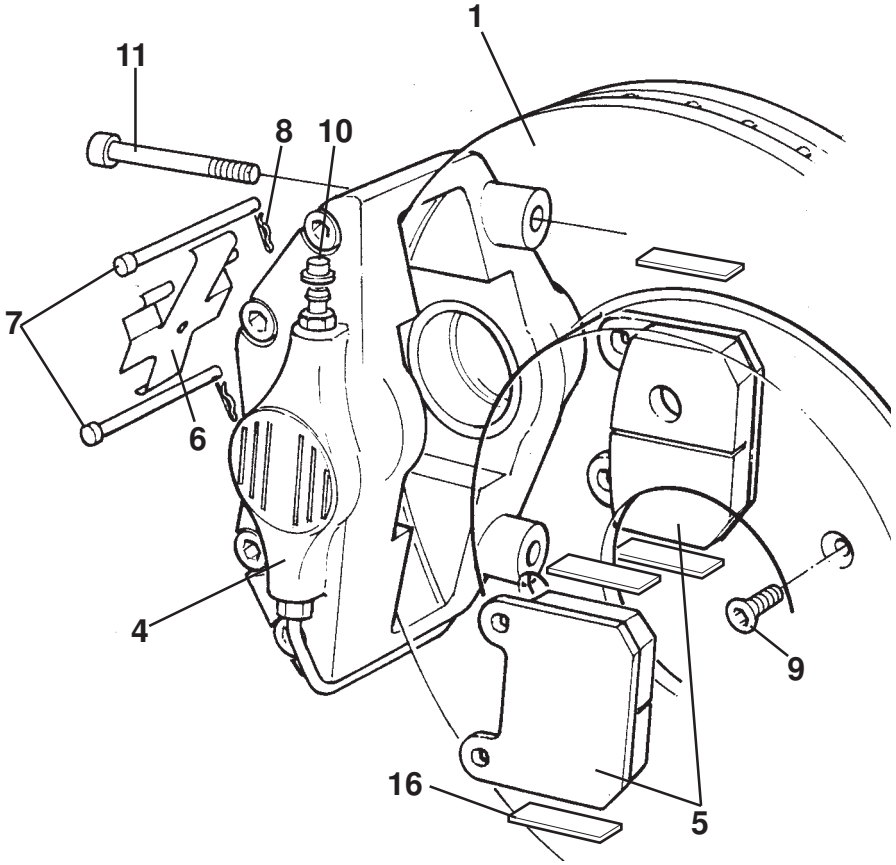

ELISE

33.01

Service Parts List ELISE

Function Code 33.01 Brake Discs, Calipers, & Parking Brake Assembly

Dep	Part Description	Remarks	Option	Part Number	Qty
01	Brake Disc, cross drilled			**C117J0031F**	4
02	Brake Caliper, rear, RH	Includes brake pads, T4139		**A116J0080F**	1
02a	Brake Caliper, rear, RH	No brake pads		**B116J0082S**	1
02b	Brake Caliper, rear, RH, red	Includes brake pads	17.5 MY	**A147J4006F**	1
02c	Brake Caliper, rear, RH, red	No brake pads	17.5 MY	**A147J4008S**	1
02d	Brake Caliper, rear, LH	Includes brake pads, T4139		**A116J0079F**	1
02e	Brake Caliper, rear, LH	No brake pads		**B116J0081S**	1
02f	Brake Caliper, rear, LH, red	Includes brake pads	17.5 MY	**A147J4005F**	1
02g	Brake Caliper, rear, LH, red	No brake pads	17.5 MY	**A147J4007S**	1
03	Brake Pad Set, rear			**B117J0085S**	1
04	Brake Caliper, front, RH, 'lotus'	Includes brake pads, T4139	Excludes China	**A117J0132F**	1
04a	Brake Caliper, front, LH, 'lotus'	Includes brake pads, T4139	Excludes China	**A117J0131F**	1
04b	Brake Caliper, front, black, RH. 'Lotus'	Includes brake pads, T4139	Excludes China	**B117J0134F**	1
04c	Brake Caliper, front, black, LH, l'otus'	Includes brake pads, T4139	Excludes China	**B117J0133F**	1
04d	Brake Caliper, front, RH, 'AP Racing'	Includes brake pads, T4139		**A116J0078F**	1
04e	Brake Caliper, front, LH, 'AP Racing'	Includes brake pads, T4139		**A116J0077F**	1
04f	Brake Caliper, front, RH, red, 'AP Racing'	Includes brake pads, T4139	17.5 MY	**A147J4004F**	1
04g	Brake Caliper, front, LH, red, 'AP Racing'	Includes brake pads, T4139	17.5 MY	**A147J4003F**	1

Function Code 33.01 Brake Discs, Calipers, & Parking Brake Assembly

Dep	Part Description	Remarks	Option	Part Number	Qty
05	Brake Pad Set, front			**B117J0084S**	1
05a	Shims, metal, pad front, RH	Not illustrated, if original fitted		**A117J0114H**	1
05b	Shims, metal, pad front, LH	Not illustrated, if original fitted		**A117J0115H**	1
06	Anti-Rattle Spring, front brake pads			**B111J0098H**	2
07	Pin, front pad retaining			**B111J0123H**	4
08	'R' clip, pin retention			**A075W6175F**	4
09	Screw, M6 x 16, csk., skt., hd., disc to hub			**A918W7120F**	4
10	Nipple Cover, front brake bleed			**A111J6029F**	2
11	Bolt, M10 x 65, cap hd., front caliper fixing			**A111W7144F**	4
12	Bolt, M10 x 80, hex. hd., rear caliper fixing			**B082W1113F**	2
13	Bolt, M8 x 60, cap hd., rear caliper fixing	Black finish		**A111W1166F**	2
14	Washer, flat, M10 x 20.5, rear caliper upper fixing bolt			**A075W4024Z**	2
15	Sliding Pin Bush Kit, rear calipers	Includes sleeves, boots & seals		**A082J6162S**	2
16	Buffer, front brake pads	Self adhesive to caliper		**A111J6030S**	4
17	Piston Retraction Tool, rear calipers	Not illustrated		**T000T1242F**	1

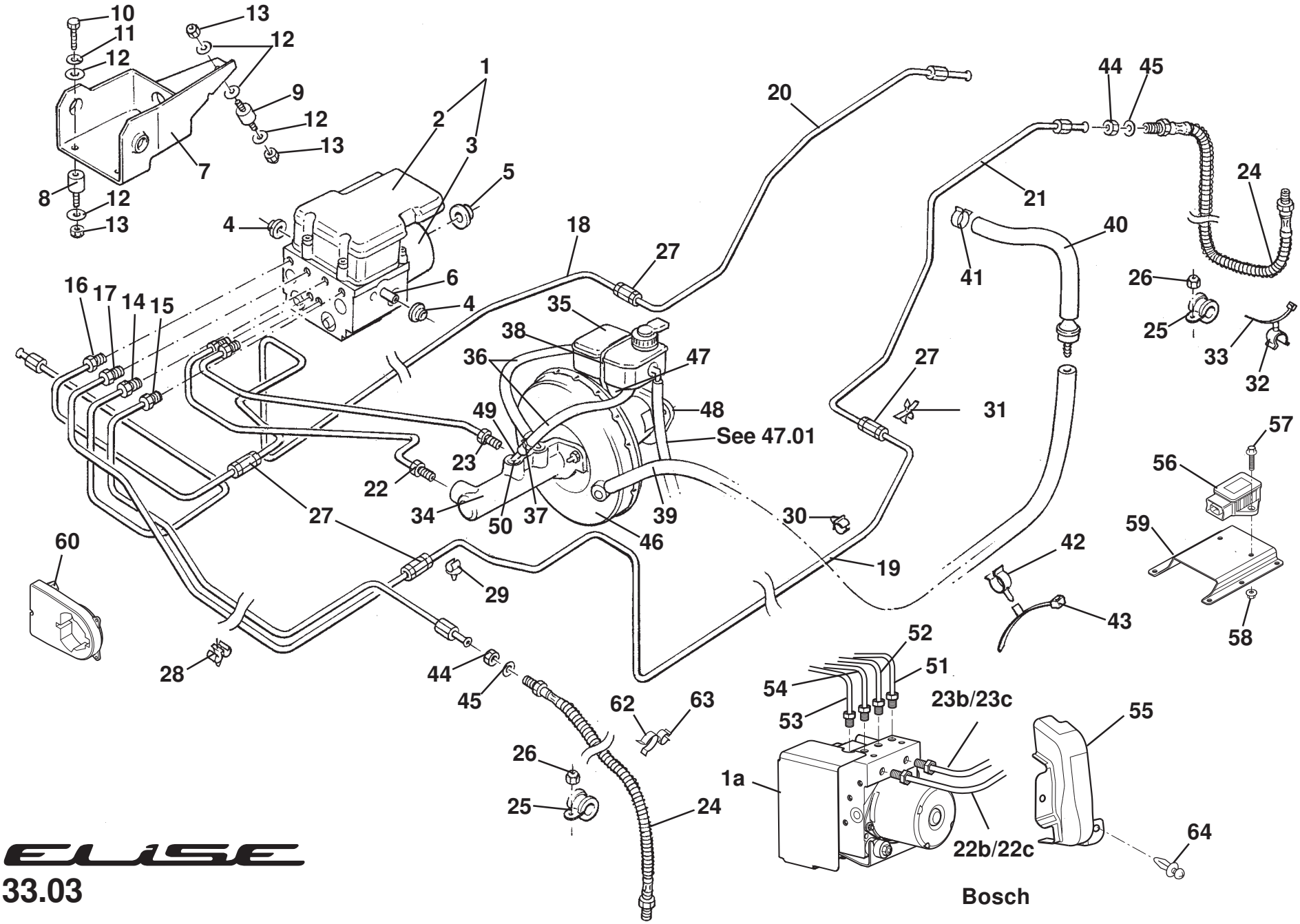
10
11
12
13
12
9
12
13
7
8
12
13
1
2
3
4
5
6
4
18
27
20
44
45
24
21
40
41
26
25
33
32
16
17
14
15
35
38
36
47
48
See 47.01
49
23
22
34
50
37
39
46
27
27
31
30
19
57
56
59
58
42
43
60
29
28
44
45
62
63
26
25
24
52
51
54
53
23b/23c
1a
22b/22c
55
64
Bosch

ELISE

33.03

Function Code 33.03 Master Cylinder, Servo, ABS Controller, Pipes & Hoses

Dep	Part Description	Remarks	Option	Part Number	Qty
01	ABS Control Module	Kelsey Hayes ABS	1ZR to vin BH_10930	**A120J6000F**	1
01a	ABS-HBA Control Module, uncalibrated	Bosch ABS, Supplied pre-filled, dealer programmed on tech centre	1ZR From vin BH_10931 & 2ZR SOP	**A132J0223S**	1
02	ECU Kit, ABS actuator	Kelsey Hayes ABS		**A120J6004S**	1
03	HCU Kit, ABS actuator	Kelsey Hayes ABS		**A116M0091S**	1
04	Grommet, small, module to bracket sides			**A116J6001F**	2
05	Grommet, large, module to bracket rear			**A116J6002F**	1
06	Bolts, ABS kit			**A116J6003F**	1
07	Bracket, ABS module mounting, RHD			**A116J0002F**	1
07a	Bracket, ABS module mounting, LHD			**A116J0001F**	1
07b	Bracket, ABS module mounting	Bosch, ABS	1ZR From vin BH_10931 & 2ZR SOP	**A120J0073F**	1
08	Rubber Bobbin, bracket to mount	One stud, one tapped insert		**A082J6177F**	2
09	Rubber Isolator Bush, bracket to body	Two studs		**A082J6170F**	1
10	Screw, M6 x 10, hex. hd., bobbin to bracket			**A075W1026Z**	2
11	Washer, spring, M6, bobbin to bracket			**A075W4035Z**	2
12	Washer, flat, M6 x 15, bobbin to bracket			**A075W4015Z**	6
13	Nyloc Nut, M6, bobbin fix.			**A075W3009Z**	4
14	Pipe, ABS to front RH, RHD			**B116J0017F**	1
14a	Pipe, ABS to front RH, LHD			**A116J0018F**	1
15	Pipe, ABS to front LH, RHD			**B116J0016F**	1

Function Code 33.03 Master Cylinder, Servo, ABS Controller, Pipes & Hoses

Dep	Part Description	Remarks	Option	Part Number	Qty
15a	Pipe, ABS to front LH, LHD			**A116J0019F**	1
16	Pipe, ABS to sill RH, RHD			**B116J0020F**	1
16a	Pipe, ABS to sill RH, LHD			**A116J0022F**	1
17	Pipe, ABS to sill LH, RHD			**B116J0021F**	1
17a	Pipe, ABS to sill LH, LHD			**A116J0023F**	1
18	Pipe, front to rear sill, RH			**C116J0028F**	1
19	Pipe, front to rear sill, LH			**B116J0027F**	1
20	Pipe, sill to flexi rear, RH			**B120J0004F**	1
21	Pipe, sill to flexi rear, LH			**B120J0003F**	1
22	Pipe, ABS to master cylinder front port, RHD			**C116J0030F**	1
22a	Pipe, ABS to master cylinder front port, LHD			**B116J0029F**	1
22b	Pipe, ABS to master cylinder front port, RHD	Bosch ABS	1ZR From vin BH_10931 & 2ZR SOP	**A120J0085F**	1
22c	Pipe, ABS to master cylinder front port, LHD	Bosch ABS	1ZR From vin BH_10931 & 2ZR SOP	**A120J0083F**	1
23	Pipe, ABS to master cylinder rear port, RHD			**C116J0032F**	1
23a	Pipe, ABS to master cylinder rear port, LHD			**B116J0031F**	1
23b	Pipe, ABS to master cylinder rear port, RHD	Bosch ABS	1ZR From vin BH_10931 & 2ZR SOP	**A120J0086F**	1
23c	Pipe, ABS to master cylinder rear port, LHD	Bosch ABS	1ZR From vin BH_10931 & 2ZR SOP	**A120J0084F**	1
24	Hose, pipe to caliper, front & rear	USA Certification		**B082J4390F**	4

Function Code 33.03 Master Cylinder, Servo, ABS Controller, Pipes & Hoses

Dep	Part Description	Remarks	Option	Part Number	Qty
25	Clip, 10mm dia. x 15 wide, hose retention	Upper front, lower rear wishbones		**A111W6595F**	4
26	Nyloc Nut, M6, thin Zn, clip to wishbone			**A907E6285F**	4
27	Connector, brake pipes			**A116J6032F**	4
28	Clip, double, pipes to scuttle		LHD	**A116W6668F**	2
29	Clip, button, single, pipe to scuttle	Cut to clear extrusion		**A116W6661F**	2
30	Clip, single, pipe to chassis siderail			**A082W6457F**	8
31	Clip, single, pipe to chassis rear			**A116W6700F**	2
32	Swivel Clip, rear hoses to toe links			**A089W6287F**	2
33	Cable Tie, rear hoses to toe links			**A082W6324F**	2
34	Master Cylinder			**A116J0047H**	1
35	Brake Fuid Reservoir			**A116J0048F**	1
36	Hose, reservoir to master cylinder			**A116J0074H**	2
37	Hose Clip, hose to spigots			**A116J0073H**	4
38	Cable Tie, reservoir to bracket			**B075W6045Z**	1
39	Hose, vacuum, servo to check valve	2ZR cut to 3240mm, 1ZR cut to 3390mm	1ZR, 2ZR	**A116J6038F**	1
40	Hose Assembly, 2ZZ, 2ZR	Includes check valve	2ZR	**A120J0008K**	1
40a	Hose, 1ZR	Also see 43.03	1ZR	**A131J0001F**	1
41	Hose Clamp, 14mm, hose to throttle body			**A116K6017F**	1
42	Swivel Clip, hose to heater pipe			**A082W6587F**	6
43	Cable Tie, heater pipe to hose			**A082W6324F**	6

Function Code 33.03 Master Cylinder, Servo, ABS Controller, Pipes & Hoses

Dep	Part Description	Remarks	Option	Part Number	Qty
44	Nut, M10 x 1.0, thin Zn, pipe to hose			**A075J6017Z**	4
45	Washer, M10, internal shakeproof, pipe to hose			**A075W4049Z**	4
46	Brake Servo			**A116J0051H**	1
47	Bracket, reservoir mounting, LHD			**A116J0050H**	1
47a	Bracket, reservoir mounting, RHD			**A116J0084H**	1
48	Bracket, servo to pedal box			**A116J0049H**	1
49	Spigot, hoses to master cylinder			**A120J6003S**	2
50	Grommet, spigot to master cylinder			**A120J6008S**	2
51	Pipe, ABS to left front LHD, RHD	Bosch ABS	1ZR From vin BH_10931 & 2ZR SOP	**A120J0079F**	1
52	Pipe, ABS to right front LHD, RHD	Bosch ABS	1ZR From vin BH_10931 & 2ZR SOP	**A120J0080F**	1
53	Pipe, ABS to left body side LHD, RHD	Bosch ABS	1ZR From vin BH_10931 & 2ZR SOP	**A120J0081F**	1
54	Pipe, ABS to right body side LHD, RHD	Bosch ABS	1ZR From vin BH_10931 & 2ZR SOP	**A120J0082F**	1
55	Shield splash, ABS module	Bosch ABS	1ZR From vin BH_10931 & 2ZR SOP	**A120B0387F**	1
56	Yaw Rate Sensor	Bosch ABS	1ZR From vin BH_10931 & 2ZR SOP	**A132J0093F**	1
57	Screw, M6 x 20, hex. flg. hd., sensor mounting	Bosch ABS	1ZR From vin BH_10931 & 2ZR SOP	**A117W2203F**	2
58	Nut M6, flg., sensor mounting	Bosch ABS	1ZR From vin BH_10931 & 2ZR SOP	**A117W3180F**	2

Function Code 33.03 Master Cylinder, Servo, ABS Controller, Pipes & Hoses

Dep	Part Description	Remarks	Option	Part Number	Qty
59	Bracket mounting, yaw sensor	Bosch ABS	1ZR From vin BH_10931 & 2ZR SOP	**A120J0078F**	1
60	Steering Angle Sensor	Bosch ABS, see 32.01	1ZR From vin BH_10931 & 2ZR SOP	**A132J0092F**	1
61	Bush Mounting, ABS module	Bosch ABS	1ZR From vin BH_10931 & 2ZR SOP	**A132J0206F**	1
62	Clip Swivel, 6-10mm, brake hose			**A116W6656F**	6
63	Clip, wheel speed sensor			**A082W6325F**	6
64	Scrivet			**A120W6848F**	2

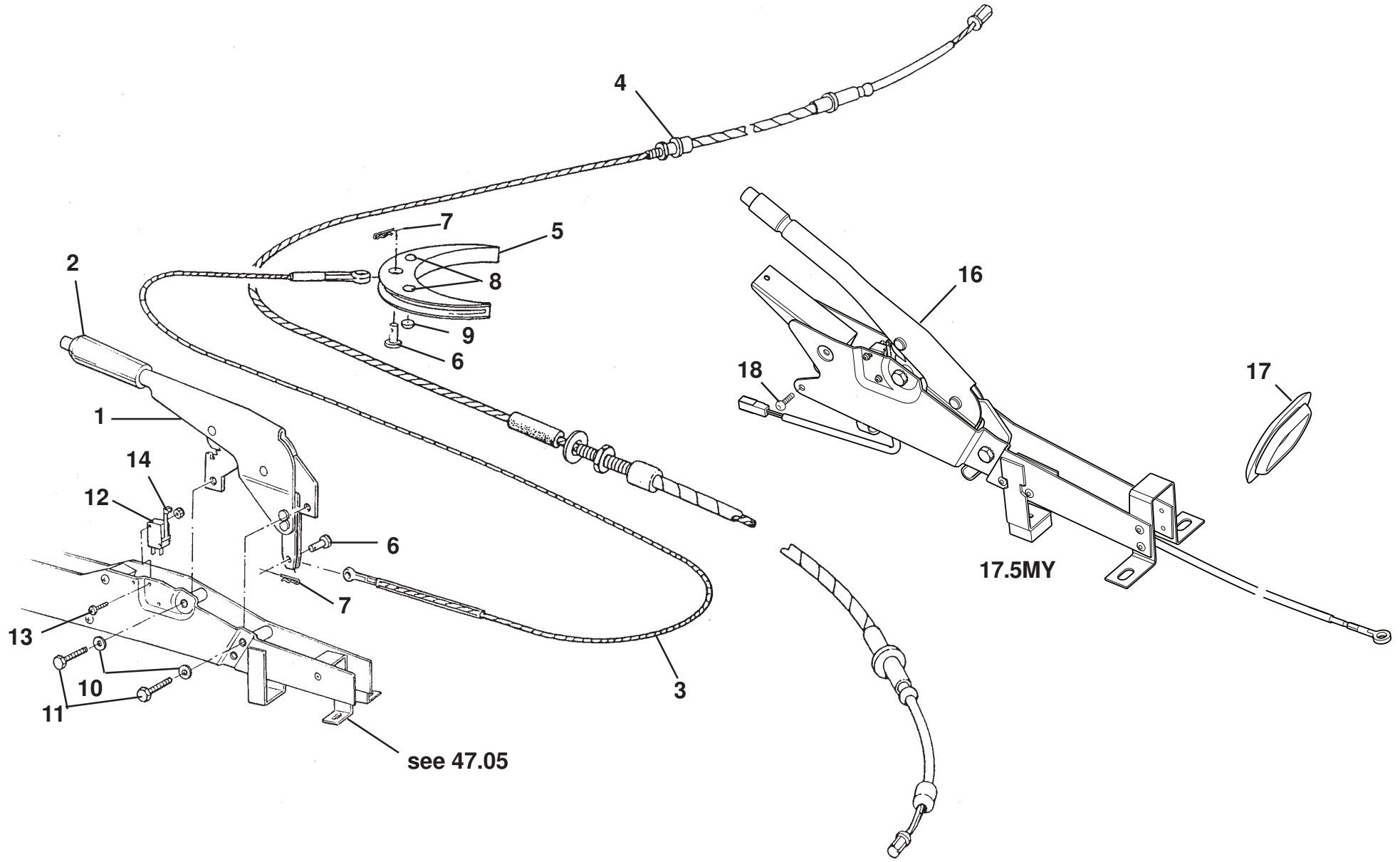

ELISE

33.05

Updated 4th September2017

Function Code 33.05 Parking Brake Mechanism

Dep	Part Description	Remarks	Option	Part Number	Qty
01	Parking Brake Assembly, without hand grip			**A116J0015H**	1
02	Hand-Grip, alloy, satin finish, parking brake lever			**A117U0147F**	1
02a	Hand-Grip, alloy, carbon grey finish, parking brake lever		Elise Club Racer	**A120U0149F**	1
02b	Hand-Grip Assembly, leather*		Leather	**A132U0211JL**	1
03	Cable, parking brake primary			**A120J0005H**	1
04	Cable, parking brake secondary	Includes equaliser		**A120J0039F**	1
05	Equaliser, parking brake	Bumper type, cushion type P/O item 4		**A117J0120F**	1
06	Clevis Pin, M8 x 10.5, cable fixing			**A111W6674F**	2
07	'R' Clip, pin fixing			**A075W6175F**	2
08	Bumper, self adhesive			**A111J6025F**	2
09	Bumper, self adhesive			**A111J6027F**	2
10	Screw, M8 x 25, hex. hd., lever to bracket			**A075W1039Z**	2
11	Washer, flat, M8 x 16 x1.4, lever to bracket			**A075W4020Z**	2
12	Switch, parking brake tell tale			**A132J6060S**	1
13	Screw, M3 x 16, pan hd. pozi., switch to bracket			**A082W5110F**	2
14	Nyloc Nut, M3, switch to bracket			**A079W3060F**	2
15	Foam, self adhesive, equaliser	Not illustrated		**A100B0431V**	1
16	Parking Brake Assembly		17.5 MY	**A147J0006F**	1

Function Code 33.05 Parking Brake Mechanism

Dep	Part Description	Remarks	Option	Part Number	Qty
17	Grommet, cables		17.5 MY	**A138J0135F**	1
18	Screw M6 x 12 skt btn hd			**A126W7226F**	2

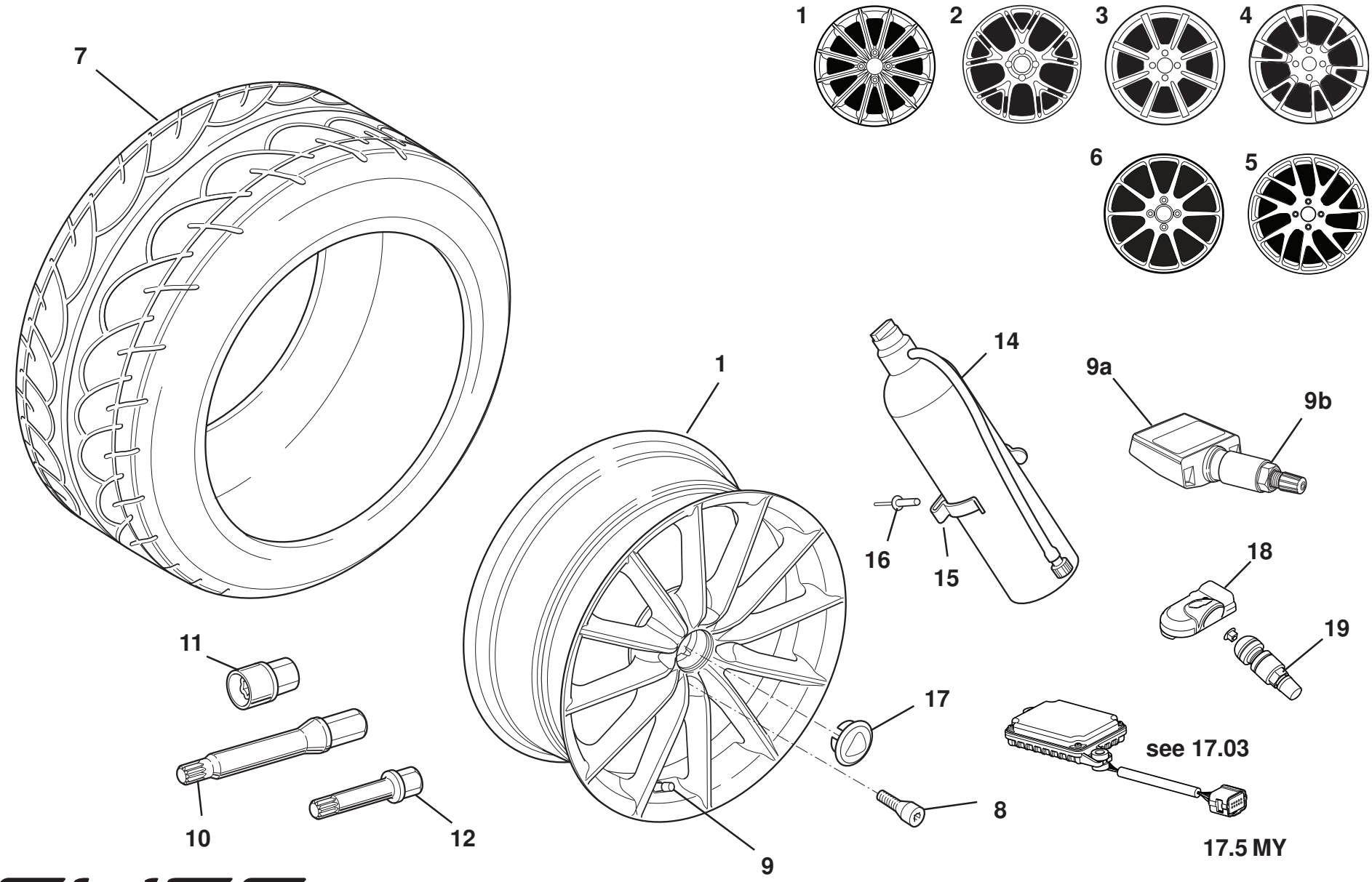

ELISE

34.01b

Updated 3rd April 2017

Function Code 34.01b Wheels, Tyres & Valves, Elise 2011 MY

Dep	Part Description	Remarks	Option	Part Number	Qty
01	Road Wheel, front, twelve spoke, HP silver, 5.5J x 16	Cast, TPMS compatible for 17.5 MY		**A120G0052F**	2
01a	Road Wheel, rear, twelve spoke, HP silver, 7.5J x 17	Cast, TPMS compatible for 17.5 MY		**A120G0053F**	2
01b	Road Wheel, front, twelve spoke, satin black, 5.5J x 16	TPMS compatible for 17.5 MY		**A120G0054F**	2
01c	Road Wheel, rear, twelve spoke, satin black, 7.5J x 17	TPMS compatible for 17.5 MY		**A120G0055F**	2
02	Road Wheel, front, five Y spoke, forged, silver, 6.0j x 16	Not TPMS compatible for 17.5 MY	Optional	**A128G0005F**	2
02a	Road Wheel, rear, five Y spoke, silver, 8.0j x 17	Not TPMS compatible for 17.5 MY	Optional	**A128G0006F**	2
02b	Road Wheel, front, five Y spoke, forged, black, 6.0j x 16	Satin black, Not TPMS compatible for 17.5 MY	Optional,RGB	**A128G0003F**	2
02c	Road Wheel, rear, five Y spoke, forged, black, 8.0j x 17	Satin black, Not TPMS compatible for 17.5 MY	Optional,RGB	**A128G0004F**	2
03	Road Wheel, front, eight spoke, HP silver light, 5.5J x 16	Not checked for TPMS compatibility for 17.5 MY		**A117G0138S**	2
03a	Road Wheel, rear, eight spoke, HP silver light, 7.5j x 17	Not checked for TPMS compatibility for 17.5 MY		**B121G0005F**	2
03b	Road Wheel, front, eight spoke, satin black, 5.5J x 16	Not checked for TPMS compatibility for 17.5 MY		**A120G0059F**	2
03c	Road Wheel, rear, eight spoke, satin black, 7.5j x 17	Not checked for TPMS compatibility for 17.5 MY		**A120G0060F**	2
04	Road Wheel, front, six V spoke, HP silver, 6.0j x 16	Not checked for TPMS compatibility for 17.5 MY		**A120G0048F**	2

Function Code 34.01b Wheels, Tyres & Valves, Elise 2011 MY

Dep	Part Description	Remarks	Option	Part Number	Qty
04a	Road Wheel, rear, six V spoke, HP silver, 8.0j x 17	Not checked for TPMS compatibility for 17.5 MY		**A120G0049F**	2
04b	Road Wheel, front, six V spoke, satin black, 6.0j x 16	Not checked for TPMS compatibility for 17.5 MY		**A120G0061F**	2
04c	Road Wheel, rear, six V spoke, satin black, 8.0j x 17	Not checked for TPMS compatibilityf or 17.5 MY		**A120G0062F**	2
05	Road Wheel, front seven Y spoke,forged, HP silver, 6.0 x 16	Not TPMS compatible for 17.5 MY	Optional MY12	**A120G0065F**	2
05a	Road Wheel, rear seven Y spoke,forged, HP silver, 8.0 x 17	Not TPMS compatible for 17.5 MY	Optional MY12	**A120G0066F**	2
05b	Road Wheel, front seven Y spoke,forged,satin black, 6.0 x 16	Not TPMS compatible for 17.5 MY	Optional MY12	**A120G0067F**	2
05c	Road Wheel, rear seven Y spoke,forged,satin black, 8.0 x 17	Not TPMS compatible for 17.5 MY	Optional MY12	**A120G0068F**	2
06	Road Wheel, front, ten spoke forged, black, 6.0J x 16	TPMS compatible	17.5 MY	**A147G0001F**	2
06a	Road Wheel, rear, ten spoke forged, black, 8.0j x 17	TPMS compatible	17.5 MY	**A147G0002F**	2
06b	Road Wheel, front, ten spoke forged, HP silver, 6.0J x 16	TPMS compatible	17.5 MY	**A147G0003F**	2
06c	Road Wheel, rear, ten spoke forged, HP silver, 8.0j x 17	TPMS compatible	17.5 MY	**A147G0004F**	2
06d	Road Wheel, front, ten spoke forged, satin black, 6.0J x 16	Diamond cut, TPMS compatible	17.5 MY	**A147G0008F**	2
06e	Road Wheel, rear, ten spoke forged, satin black, 8.0j x 17	Diamond cut, TPMS compatible	17.5 MY	**A147G0009F**	2
07	Tyre, front, 175/55 R16, Yokohama Advan Neova AD07	**		**B121G0007L**	2
07a	Tyre, front, 195/50 R16, Toyo R888		Elise/Exige gulf states	**A120G6006F**	2
07b	Tyre, front, 195/50 R16, Yokohama A048			**B122G0013L**	2
07c	Winter Tyre, front, 195/50 R16, Pirelli W210 Snowsport	Use OE type wheels	Dealer fit	**A117G0119S**	2

Function Code 34.01b Wheels, Tyres & Valves, Elise 2011 MY

Dep	Part Description	Remarks	Option	Part Number	Qty
07d	Tyre, rear, 225/45 R17, Yokohama Advan Neova AD07	**		**A121G0006L**	2
07e	Tyre, rear, 225/45 R17, Toyo R888		Elise/Exige gulf states	**A120G6007F**	2
07f	Tyre, rear, 225/45 R17, Yokohama A048			**B117G0131L**	2
07g	Winter Tyre. rear, 215/45 R17, Pirelli W240 Snowsport	Use OE type wheels	Dealer fit	**A120G6001S**	2
08	Wheel Bolt, socket hd. 25mm thread			**B117G6000F**	12
09	Tyre Valve			**A117G6007F**	4
09a	Tyre Valve/TPMS Transmitter	Does not include item 09b	Option by market not for MY17.5	**A121G6000F**	4
09b	Nut, conical seal, TPMS transmitter		Option by market not for MY17.5	**A121G6001H**	4
10	Wheel Bolt Adaptor, standard bolt, long			**A117G0036F**	1
11	Security Wheelbolt Kit, short key	Incl. ID strip & instruction card*		**B117G0043F**	1
12	Wheel Bolt Adaptor, standard bolt, short			**A132G6003F**	1
13	Spigot ring, forged wheels	Not illus. comes with forged wheels	Optional	**A127G0009S**	4
14	Tyre Weld, repair canister			**A116G6009F**	1
15	Terry Clip, canister retaining			**A111W6590F**	2
16	Pop Rivet, clip to bulkhead			**A075W6090Z**	4
17	Wheel Centre Cover, Lotus logo	Black surround, 60mm dia 10mm deep		**A128G0013F**	4
17a	Wheel Centre Cover, Lotus logo	For items 01-01c & 06-06a, 60mm dia 15mm deep		**A132G0174F**	4

Function Code 34.01b Wheels, Tyres & Valves, Elise 2011 MY

Dep	Part Description	Remarks	Option	Part Number	Qty
17b	Wheel Centre Cover, Lotus logo	50mm dia 13mm deep, flush fitting		**A120G0046F**	4
18	Transmitter Assembly 434mhz		17.5 MY	**A132G6017F**	4
18a	Transmitter Assembly 315mhz		17.5 MY Japan	**A132G6018F**	4
19	Valve Stem Assembly		17.5 MY	**A132G6016F**	4
		* For replacement keys contact Aftersales, quoting ID			
		**See Service Bulletin 2014/09 for application for '15MY onwards			

A111G0004F 5.5 x 15
A111G0005F 7.0 x 16
Silver

A111G6030S 6.0 x 15
A111G6031S 8.0 x 16
A111G6026S 5.5 x 15
A111G6027S 7.0 x 16
Silver

A111G6032S 6.0 x 15
A111G6033S 8.0 x 16
A111G6028S 5.5 x 15
A111G6029S 7.0 x 16
Grey

A128G0007F 7.0 x 16
A128G0008F 8.0 x 17
Satin black

ALS3G0064F 7.0 x 16
ALS3G0065F 8.0 x 17
Gloss black

ALS3G0066F 7.0 x 16
ALS3G0067F 8.0 x 17
HP silver

ALS3G0062F 7.0 x 16
ALS3G0063F 8.0 x 17
Glitter silver

A127G0001F 7.0 x 16
A127G0002F 8.0 x 17
Satin black

A127G0004F 7.0 x 16
A127G0003F 8.0 x 17
Silver

ALS3X0129F 7.0 x 16
ALS3X0130F 8.0 x 17
Black/silver (Type 25)

A122G0017S 7.0 x 16
A122G0018S 8.0 x 17
Black/gold (Type 72)

A128G0003F 6.0 x 16
A128G0004F 8.0 x 17
Satin black

A128G0005F 6.0 x 16
A128G0006F 8.0 x 17
Silver

Elise MK1 (Rover p/train)
Elise MK2 (Rover p/train)
Elise MK2 (Toyota p/train)
Exige MK1 (Rover p/train)
Exige MK2 (Toyota p/train)

A111G0012F 5.5 x 15
A111G0013F 7.5 x 16
HP silver

A111G0029F 5.5 x 15
A111G0031F 7.5 x 16
Gold (Type 49 JPS)

D117G0014H 5.5 x 16
D117G0015H 7.5 x 17
Glitter silver

A117G0111H 5.5 x 16
A117G0112H 7.5 x 17
Gold (Type 72)

A117G0113H 5.5 x 16
A117G0114H 7.5 x 17
A131G0006H 5.5 x 16
B131G0001H 7.5 x 17
HP silver

D117G0024H 5.5 x 16
D117G0025H 7.5 x 17
Black

A120G0057F 5.5 x16
A120G0058F 7.5 x17
Stealth grey

A120G0042H 6.0 x 16
A120G0032H 6.5 x 16
A120G0033H 7.5 x 17
HP silver

A120G0047H 6.0 x 16
A120G0026H 6.5 x 16
A120G0027H 7.5 x 17
Black

A121G0013H 6.5 x16
A121G0015H 7.5 x17
Anodised

A117G0124H 6.5 x 16
A117G0019H 7.5 x 17
Silver

B117G0026H 5.5 x 16
B117G0027H 7.5 x 17
Silver

A117G0089H 5.5 x 16
A117G0090H 7.5 x 17
Gold

B117G0087H 5.5 x 16
A117G0088H 7.5 x 17
HP silver dark

A117G0138S 5.5 x 16
A117G0139S 7.5 x 17
A,B121G0005H 7.5 x 17
HP silver light

C117G0028H 5.5 x 16
B117G0029H 7.5 x 17
A120G0023H 7.5 x 17
Black

A120G0059H 5.5 x 16
A120G0060H 7.5 x 17
Satin black

Elise MK1 (Rover p/train)
Elise MK2 (Rover p/train)
Elise MK2 (Toyota p/train)
Exige MK1 (Rover p/train)
Exige MK2 (Toyota p/train)

A111G0042F 7.0 x 16
A111G0043F 8.5 x 17
Black

A111G6040F 5.5 x 15
A111G6041F 7.0 x 16
Silver

T A120G0052H 5.5 x 16
A120G0053H 7.5 x 17
Silver

T A120G0054H 5.5 x 16
A120G0055H 7.5 x 17
Black

A120G0048F 6.0 x 16
A120G0049F 8.0 x 17
HP silver

A120G0061F 6.0 x 16
A120G0062F 8.0 x 17
Black

A122G0015F 7.0 x 16
A122G0016F 8.0 x 17
Gloss antracite

A704G0001F 7.0 x 16
A704G0002F 8.0 x 17
Black (Elise Cup)

A704G0003F 7.0 x 16
A704G0004F 8.0 x 17
HP silver (Elise Cup)

T A147G0001F 6.0 x 16
A147G0002F 8.0 x 17
Black

T A147G0003F 6.0 x 16
A147G0004F 8.0 x 17
HP silver

T A147G0008F 6.0 x 16
A147G0009F 8.0 x 17
Black (Diamond Cut)

A120G0067F 6.0 x 16
A120G0068F 8.0 x 17
Black

A120G0065F 6.0 x 16
A120G0066F 8.0 x 17
Silver

A147G0014F 6.0 x 16
A147G0015F 8.0 x 17
Gold (Elise GP Cup 250)

T TPMS compatible for 17.5 MY

Elise MK1 (Rover p/train)
Elise MK2 (Rover p/train)
Elise MK2 (Toyota p/train)
Exige MK1 (Rover p/train)
Exige MK2 (Toyota p/train)

BLS2G6006F 6.5 x 16
BLS2G6007F 7.5 x 17
Silver

BLS2G6003F 6.5 x 16
BLS2G6005F 7.5 x 17
Black

LOTAC05382 6.5 x 16
LOTAC05383 7.5 x 17
Sliver

A122G0007H 6.5 x 16
A122G0008H 7.5 x 17
Black

A120G0063S 6.5 x 16
A120G0064S 7.5 x 17
Gold (Type 72)

T TPMS compatible for 17.5 MY

Elise MK1 (Rover p/train)
Elise MK2 (Rover p/train)
Elise MK2 (Toyota p/train)
Exige MK1 (Rover p/train)
Exige MK2 (Toyota p/train)

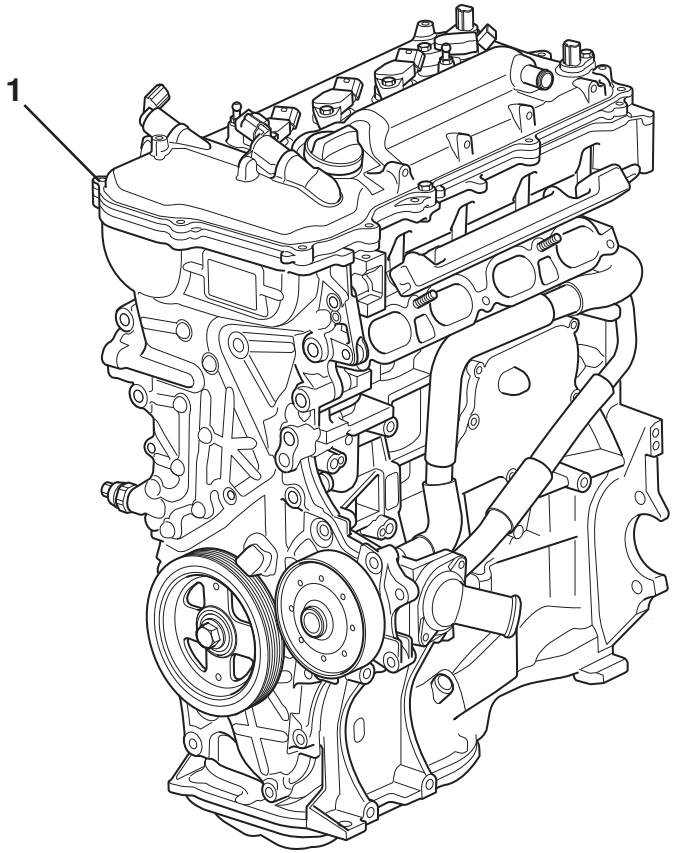
1

Function Code 40.00b Engine Assemblies

Dep	Part Description	Remarks	Option	Part Number	Qty
01	Engine Assembly, undressed, 1ZR FAE		Elise 2011 MY 1.6	**A120E7000S**	1
01a	Engine Assembly, 'short', 1ZR FAE	Block, bearing panel, crankshaft, pistons, con. Rods	Elise 2011 MY 1.6	**A120E7001S**	1
01b	Engine Assembly, undressed 2ZR FE	Already equipped with S/Plugs, Injectors, Clutch Disc & O2 Sensors	Elise S, '12 MY	**A120E0189S**	1
01c	Engine Assembly, 'short', 2ZR FE	Block, bearing panel, crankshaft, pistons, con. Rods	Elise S, '12 MY	**A120E6624S**	1

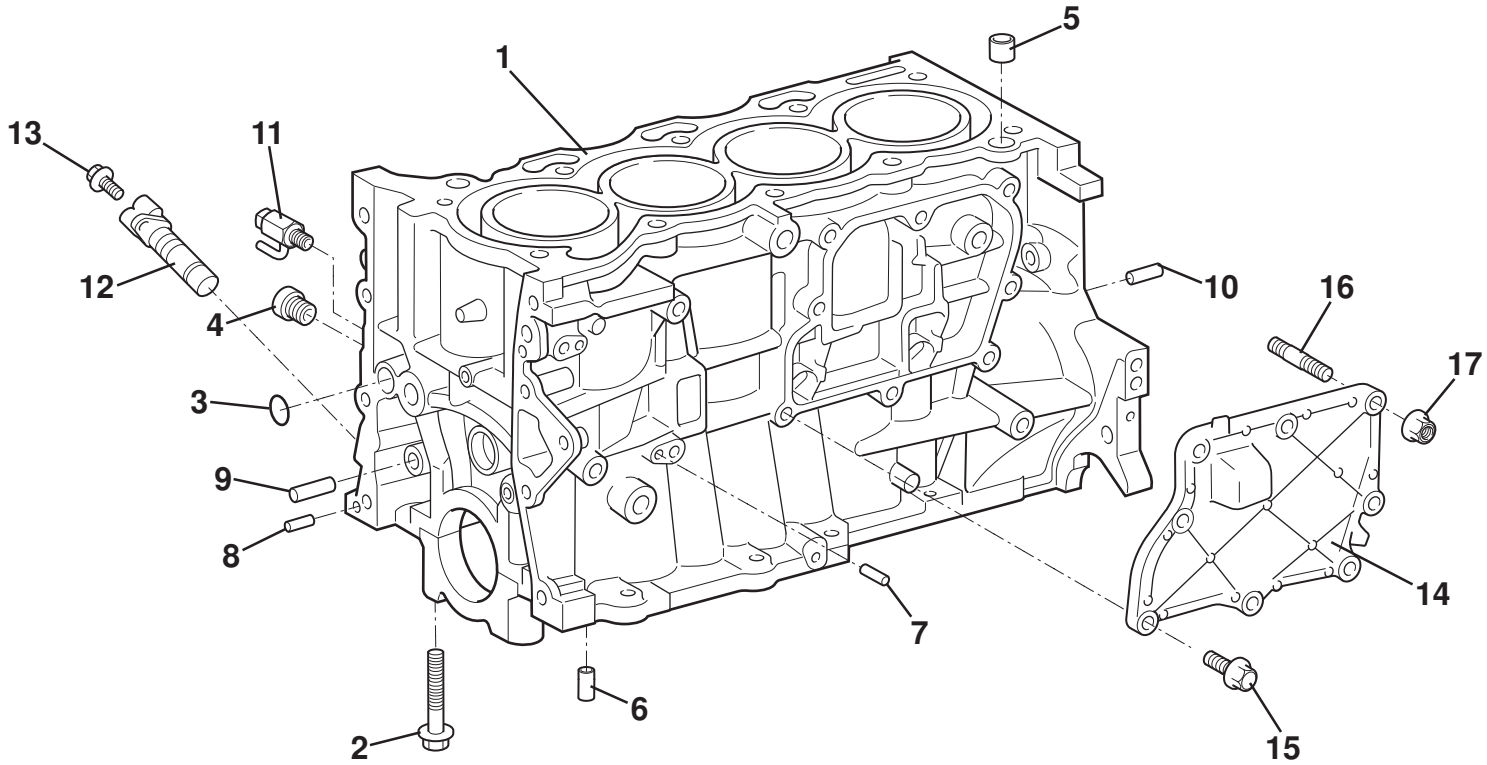

ELISE

40.01d

Function Code 40.01d Engine Block, Elise 2011 MY, 1ZR, 2ZR

Dep	Part Description	Remarks	Option	Part Number	Qty
01	Cylinder Block Assembly		1ZR	**A120E7002S**	1
01a	Cylinder Block Assembly		2ZR	**A120E6583S**	1
02	Bolt, hex. flg. hd., main bearing cap to block			**A120E7259S**	10
03	'O' Ring, block to timing cover			**A120E7289S**	1
04	Blanking Plug, tapered			**A120E7252S**	1
05	Dowel, ring, block to head			**A120E7247S**	2
06	Dowel, ring, block to sump upper			**A132E6156S**	2
07	Dowel Pin			**A132E6155S**	2
08	Dowel Pin, short, timing cover			**A132E6155S**	2
09	Dowel Pin, long, timing cover			**A132E6157S**	2
10	Dowel Pin, block to transmission			**A132E6158S**	2
11	Drain Cock Assembly			**A132E6159S**	1
12	Sensor, crank position	Also see 17.06		**A120E7268S**	1
13	Screw, hex. flg. hd., sensor retention			**A132E6478S**	1
14	Crankcase Cover			**A120E7125S**	1
15	Bolt, hex, flg. hd., cover to block			**A132E6467S**	6
16	Stud, cover to block			**A132E6115S**	2
17	Nut, flange, cover to block			**A132E6473S**	2

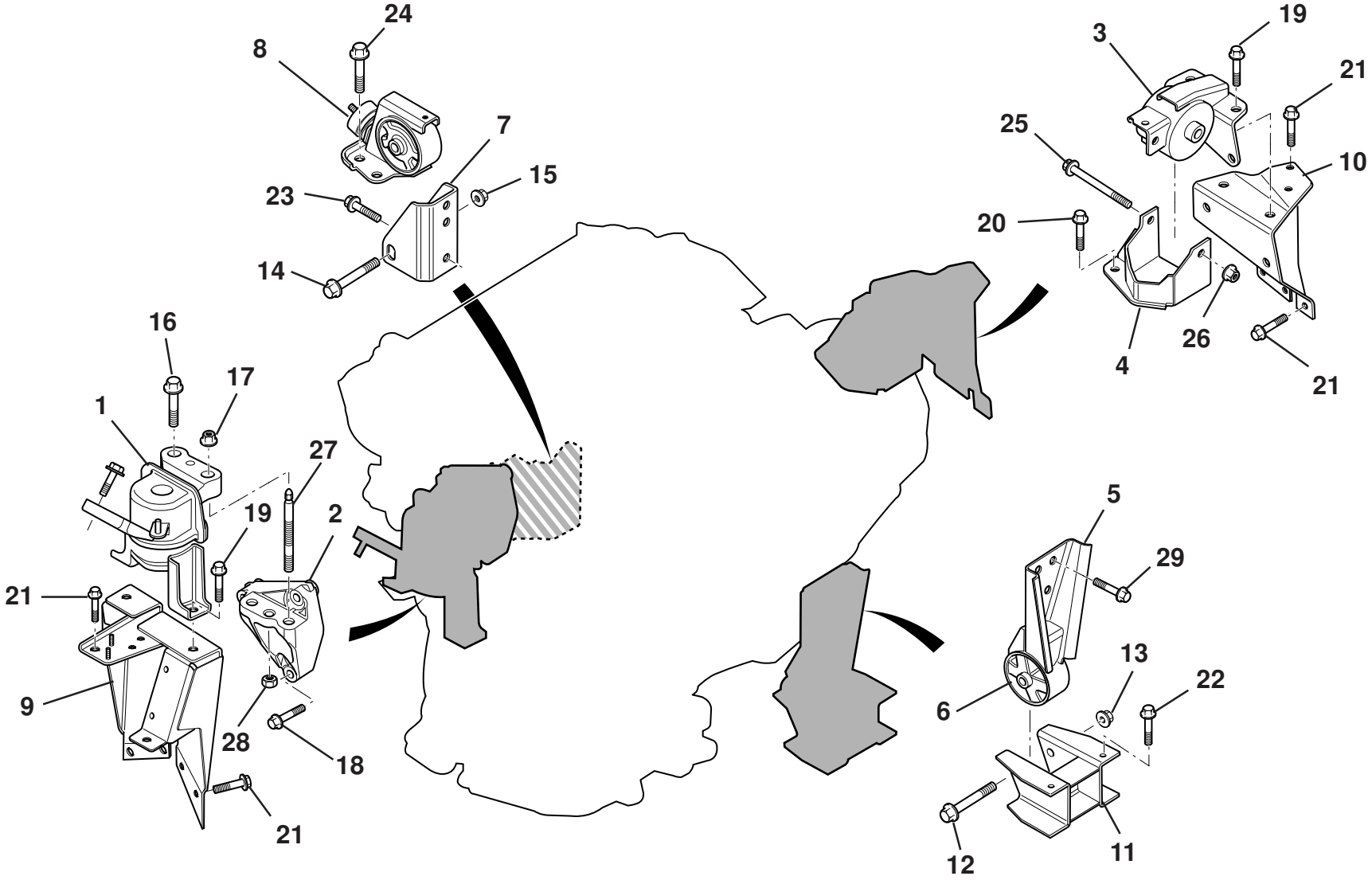
24
8
7
15
23
14
16
17
1
27
19
2
21
9
28
18
21
3
19
21
25
10
20
26
4
21
5
29
6
13
22
11
12

ELISE

40.01e

Service Parts List ELISE

Function Code 40.01e Engine Mounts, Elise 2011 MY, 1ZR, 2ZR

Dep	Part Description	Remarks	Option	Part Number	Qty
01	Insulator, engine mounting, RH, 1ZR, 2ZR			**A120E7131S**	1
02	Bracket, insulator to engine, 1ZR			**A120E7132S**	1
02a	Bracket, insulator to engine, 2ZR			**A120E0170K**	1
03	Insulator, engine mounting, LH,1ZR, 2ZR			**A120E6397S**	1
04	Bracket, insulator to transmission, 1ZR, 2ZR			**A120F0018F**	1
05	Bracket/Insulator, engine mounting, front, 1ZR, 2ZR			**A120E0094J**	1
06	Bush, engine mounting, front, 1ZR, 2ZR			**A120A0099J**	1
07	Bracket, engine insulator rear, 1ZR, 2ZR	Only use with A level item 11 or B level 07a & 11a as a pair		**A120E0095F**	1
07a	Bracket, engine insulator rear, 1ZR, 2ZR	Only use with B level item 11a	From MY17.5	**B120E0095G**	1
08	Insulator, engine mounting, rear, 1ZR, 2ZR			**A120E0125K**	1
08a	Insulator, engine mounting, rear, 1ZR, 2ZR	Item 08 without top and bottom bumper	From MY17.5	**A120E6069K**	1
09	Bracket, engine to chassis, RH, 1ZR, 2ZR			**D120A0055F**	1
10	Bracket, engine to chassis, LH, 1ZR, 2ZR			**A120A0059F**	1
11	Bracket, engine to chassis, front, 1ZR, 2ZR	Only use with A level item 07 or B level as a pair 07a & 11a		**A120A0045F**	1
11a	Bracket, engine to chassis, front, 1ZR, 2ZR	Only use with B level item 07a	MY17.5	**B120A0045F**	
12	Bolt, flg. hd., bush to bracket, front			**A120E6451S**	1
13	Nut, flg., bush to bracket, front			**A120E6454S**	1

Function Code 40.01e Engine Mounts, Elise 2011 MY, 1ZR, 2ZR

Dep	Part Description	Remarks	Option	Part Number	Qty
14	Bolt, flg. hd., bush to bracket, rear			**A120E6452S**	1
15	Nut, flg. bush to bracket, rear			**A120E6455S**	1
16	Bolt, flg. hd. insulator to bracket			**A132E6388S**	1
17	Nut, insulator to bracket			**A120E6395S**	1
18	Bolt, flg. hd., bracket to engine			**A120E7277S**	3
19	Bolt, flg. hd., insulator to chassis bracket			**A120E6390S**	4
20	Bolt, flg. hd., bracket to transmission			**A120E6495S**	3
21	Bolt, flg. hd., brackets to chassis			**A116W5238F**	4
22	Bolt, flg. hd., bracket to chassis			**A120W5278F**	2
23	Bolt, flg. hd., bracket to engine			**A132F6014H**	3
24	Bolt, flg. hd., insulator to subframe			**A120E6390S**	4
25	Bolt, flg. hd., insulator to bracket			**A132F6016H**	1
26	Nut, flg, insulator to bracket			**A132F6017H**	1
27	Stud Bolt, insulator RH			**A132E6364S**	1
28	Nut, flg. insulator to bracket			**A132E6060H**	1
29	Bolt, flg. hd., bracket to engine			**A120E6496S**	4

1 includes items 2 to 14

1a includes items 2,3,4a, 5 to 11 and 14a

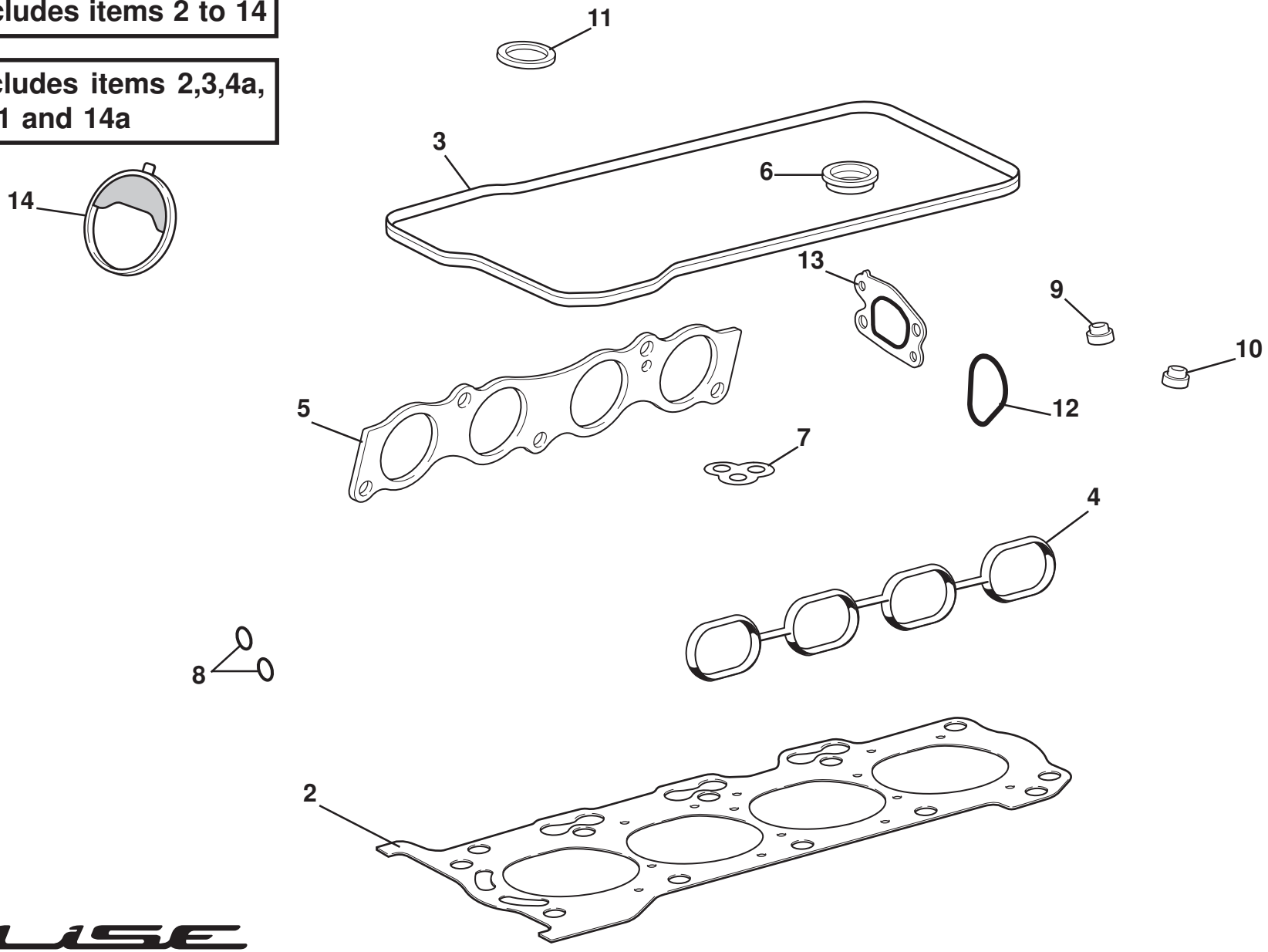

ELISE

40.02f

Function Code 40.02f Gaskets/Sealants, Top O/haul Set, Elise 2011 MY,1ZR,2ZR

Dep	Part Description	Remarks	Option	Part Number	Qty
01	Gasket Set, top overhaul	Included in item 1 engine overhaul kit, 40.02g	1ZR	**A120E7101S**	1
01a	Gasket Set, top overhaul	Included in item 1a engine overhaul kit, 40.02g	2ZR	**A120E0178S**	1
02	Gasket, cylinder head	Also see 40.05c		**A120E7105S**	1
03	Gasket, cover to cam housing	Also see 40.07e		**A120E7114S**	1
04	Gasket, inlet manifold	Also see 42.07e	1ZR	**A120E7190S**	1
04a	Gasket, inlet manifold	Also see 42.09b	2ZR	**A120E0143F**	1
05	Gasket, exhaust manifold	Also see 40.21d		**A120E7189S**	1
06	Gasket, spark plug tube	Also see 40.07e		**A120E7112S**	4
07	Gasket, cam bearing cap	Also see 40.07e		**A120E7110S**	2
08	'O' Ring	Also see 40.05c		**A120E7288S**	2
09	Valve Stem Oil Seal, inlet	Also see 40.05c		**A132E6228S**	8
10	Valve Stem Oil Seal, exhaust	Also see 40.05c		**A131E6088S**	8
11	Gasket, oil filler cap	Also see 40.07e		**A120E7253S**	1
12	'O' Ring, controller to housing	Also see 40.07e	1ZR	**A120E7292S**	1
13	Gasket, bracket to housing	Also see 40.07e	1ZR	**A120E7111S**	1
14	Gasket, throttle body	Also see 42.04b	1ZR	**A120E7189S**	1
14a	Gasket, throttle body	Also see 42.04b	2ZR	**A120E0158F**	1

1 includes items 2 to 14 in section 40.02f

1a includes items 2, 3, 4a, 5 to 11 and 14a in section 40.02f

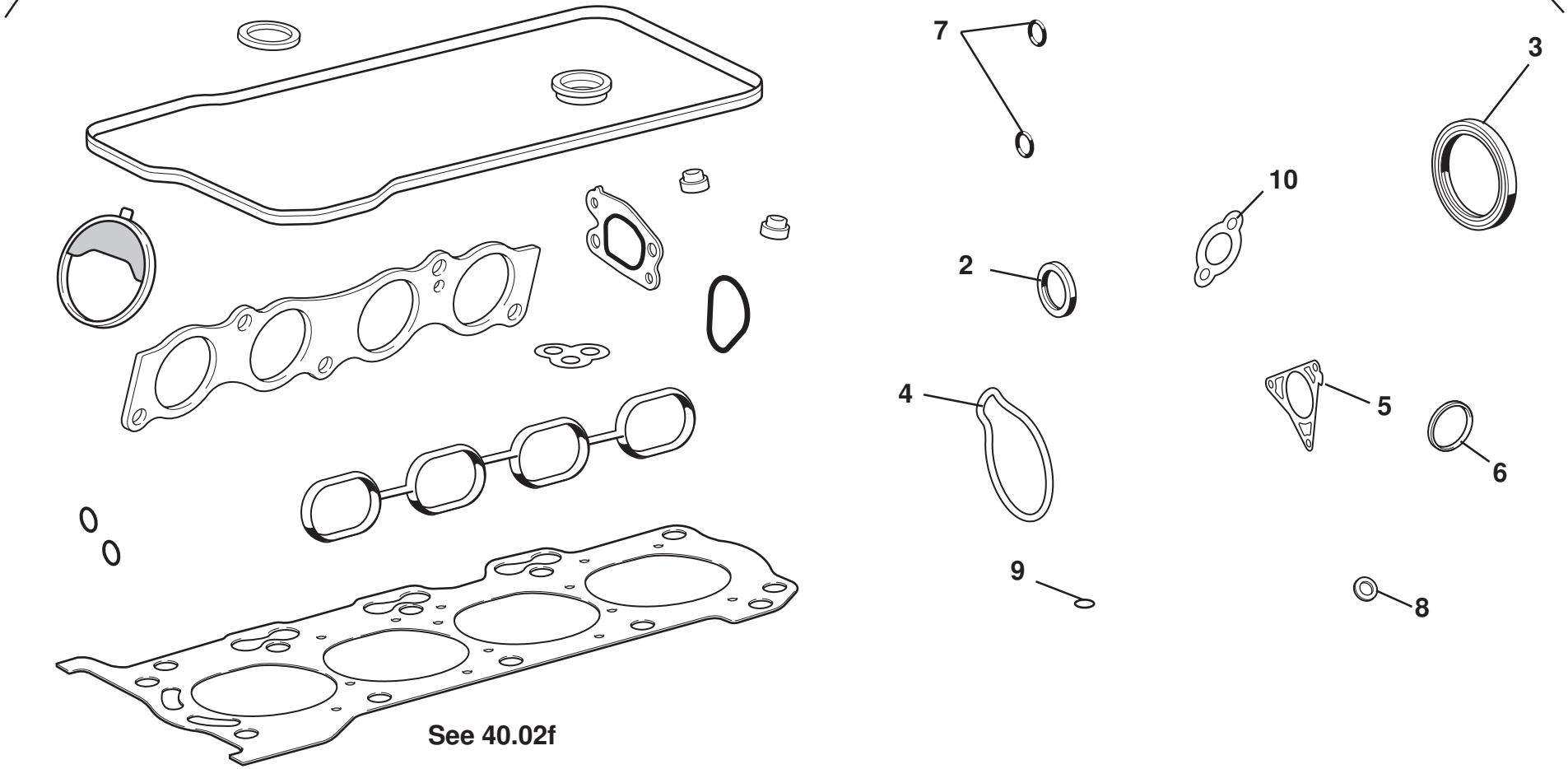

See 40.02f

Service Parts List

Function Code 40.02g Gaskets/Sealants, Engine Set, Elise 2011 MY, 1ZR, 2ZR

Dep	Part Description	Remarks	Option	Part Number	Qty
01	Gasket Set, engine overhaul	Includes item 1, 40.02f	1ZR	**A120E7100S**	1
01a	Gasket Set, engine overhaul	Includes item 1a, 40.02f	2ZR	**A120E0179S**	1
02	Oil Seal, crankshaft front	Also see 40.11c		**A120E7251S**	1
03	Oil Seal, crankshaft rear	Also see 40.11c		**A120E7250S**	1
04	Gasket, water pump	Also see 40.13c		**A120E7175S**	1
05	Gasket, thermostat housing	Also see 40.13c		**A120E7179S**	1
06	Gasket, thermostat	Also see 40.13c		**A120E7178S**	1
07	'O' Ring, oil filter housing	Also see 40.15d		**A120E7289S**	2
08	Seal, sump plug	Also see 40.03c		**A120E6461S**	1
09	'O' Ring, dipstick tube	Also see 40.15d		**A120E6281S**	1
10	Gasket, tensioner to cover	Also see 40.08b		**A120E7152S**	1

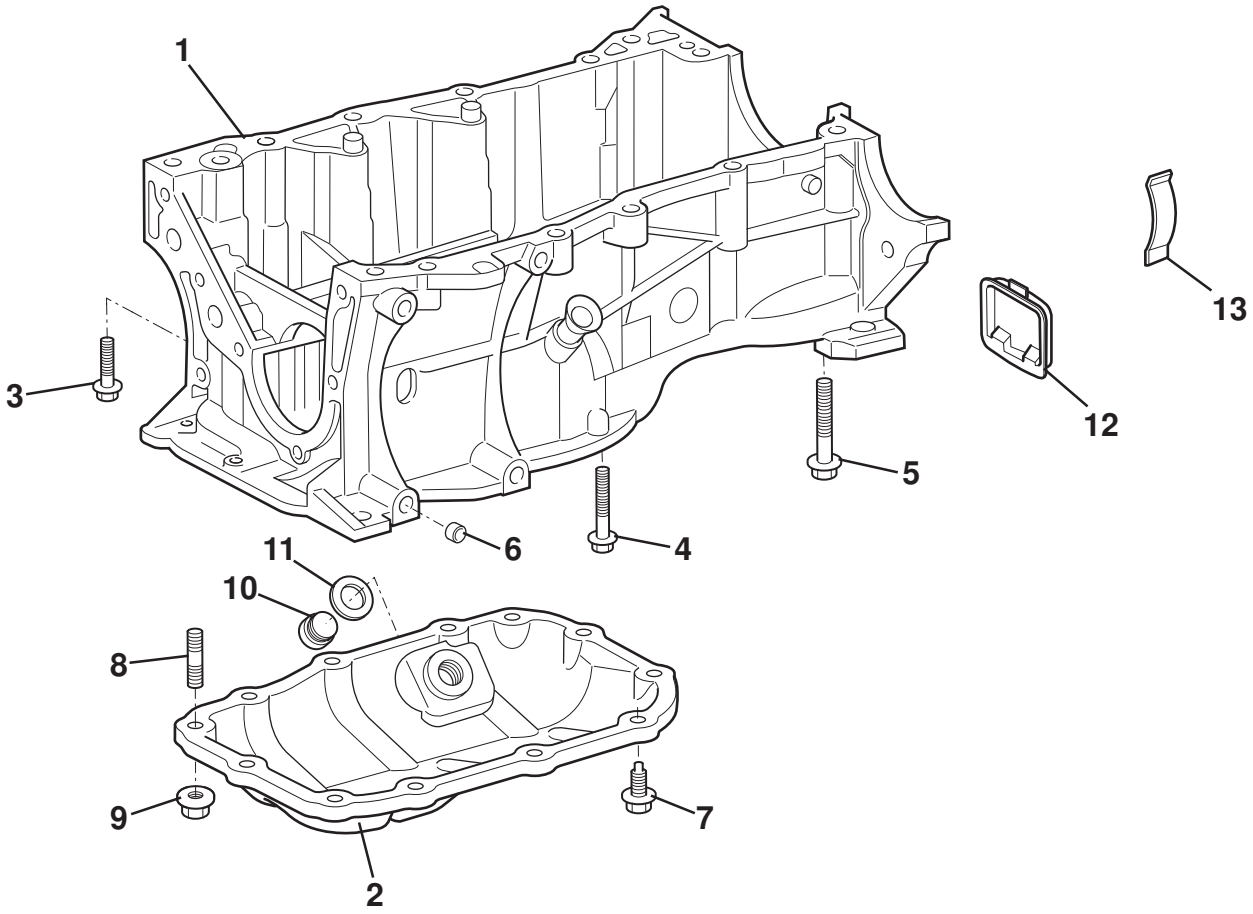

ELISE

40.03c

Service Parts List

Function Code 40.03c Sump Assembly, Elise 2011 MY, 1ZR, 2ZR

Dep	Part Description	Remarks	Option	Part Number	Qty
01	Sump Panel, upper	Includes dowels, item 6		**A120E7005S**	1
02	Sump Pan, lower			**A120E7006S**	1
03	Bolt, hex. flg. hd., panel to block			**A120E7274S**	6
04	Bolt, hex. flg. hd., panel to block			**A120E7273S**	3
05	Bolt, hex. flg. hd., panel to block			**A120E7237S**	2
06	Dowel, ring			**A132E6118S**	2
07	Bolt, hex. flg. hd., pan to upper panel			**A132E6456S**	10
08	Stud, pan to upper panel			**A120E7240S**	2
09	Nut, flange, pan to upper panel			**A132E6458S**	2
10	Sump Plug			**A132E6175S**	1
11	Seal, sump plug			**A120E6461S**	1
12	Cover, flywheel housing lower			**A120E7117S**	1
13	Cover,Cover, flywheel housing side			**A120E7291S**	1

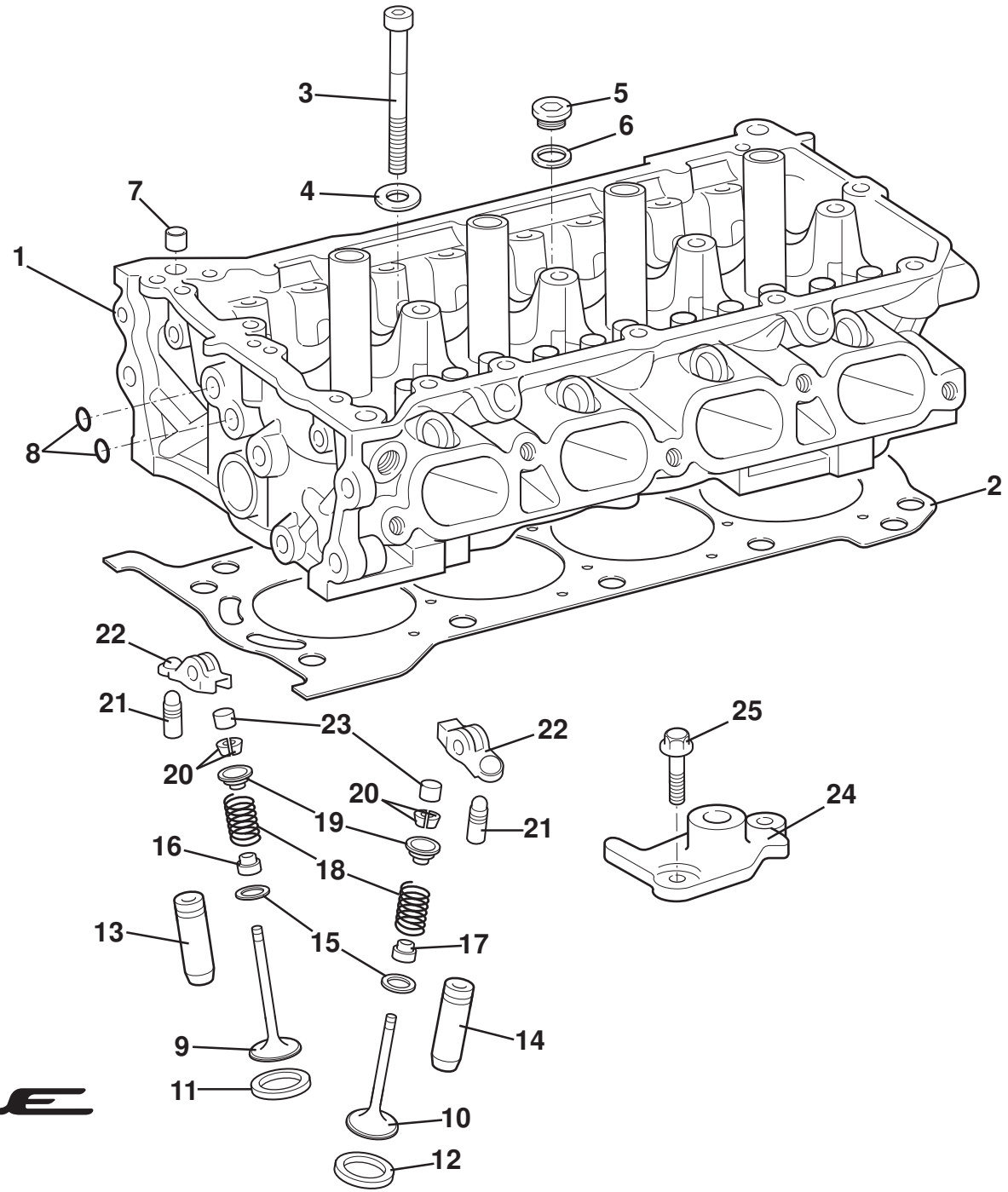

ELISE

40.05c

Function Code 40.05c Cylinder Head , Valves, Springs, Elise 2011 MY, 1ZR, 2ZR

Dep	Part Description	Remarks	Option	Part Number	Qty
01	Cylinder Head Assembly	Includes seats & guides	1ZR/2ZR	**A120E7003S**	1
02	Gasket, cylinder head	Also see 40.02g		**A120E7105S**	1
03	Bolt, cap hd., head to block			**A120E7260S**	10
04	Washer, flat, head to block			**A120E6121S**	10
05	Plug, blanking, skt. hd.			**A131F6055S**	3
06	Gasket, plug to head			**A132E6107S**	3
07	Dowel, head to cam carrier			**A120E7246S**	2
08	'O' Ring			**A120E7288S**	2
09	Exhaust Valve			**A120E7157S**	8
10	Inlet Valve			**A120E7156S**	8
11	Valve Seat Insert, exhaust, standard,			**A120E7108S**	8
11a	Valve Seat Insert, exhaust, 0.03mm O/S			**A120E7109S**	8
12	Valve Seat Insert, inlet, standard,			**A120E7106S**	8
12a	Valve Seat Insert, inlet, 0.03mm O/S			**A120E7107S**	8
13	Valve Guide, exhaust, standard		1ZR	**A132E6404S**	8
13a	Valve Guide, exhaust, 0.5mm O/S		1ZR	**A132E6405S**	8
13b	Valve Guide, exhaust		2ZR	**A120E6585S**	8
14	Valve Guide, inlet, standard		1ZR	**A132E6402S**	8

Function Code 40.05c Cylinder Head , Valves, Springs, Elise 2011 MY, 1ZR, 2ZR

Dep	Part Description	Remarks	Option	Part Number	Qty
14a	Valve Guide, inlet, 0.5mm O/S		1ZR	**A132E6403S**	8
14b	Valve Guide, inlet		2ZR	**A120E6586S**	8
15	Valve Spring Seat			**A132E6225S**	16
16	Valve Stem Oil Seal, exhaust			**A131E6088S**	8
17	Valve Stem Oil Seal, inlet			**A132E6228S**	8
18	Valve Spring		1ZR	**A120E7257S**	8
18a	Valve Spring		2ZR	**A120E6587S**	16
19	Valve Retainer			**A120E7158S**	16
20	Valve Collet			**A131E6212S**	32
21	Hydraulic Pivot Post			**A120E7159S**	16
22	Finger Follower			**A132E6233S**	16
23	Cap, valve stem		1ZR & 2ZR	**A132E6231S**	16
24	Damper Assembly, follower			**A120E7160S**	4
25	Bolt, hex. flg. hd., damper fixing			**A120E7270S**	8

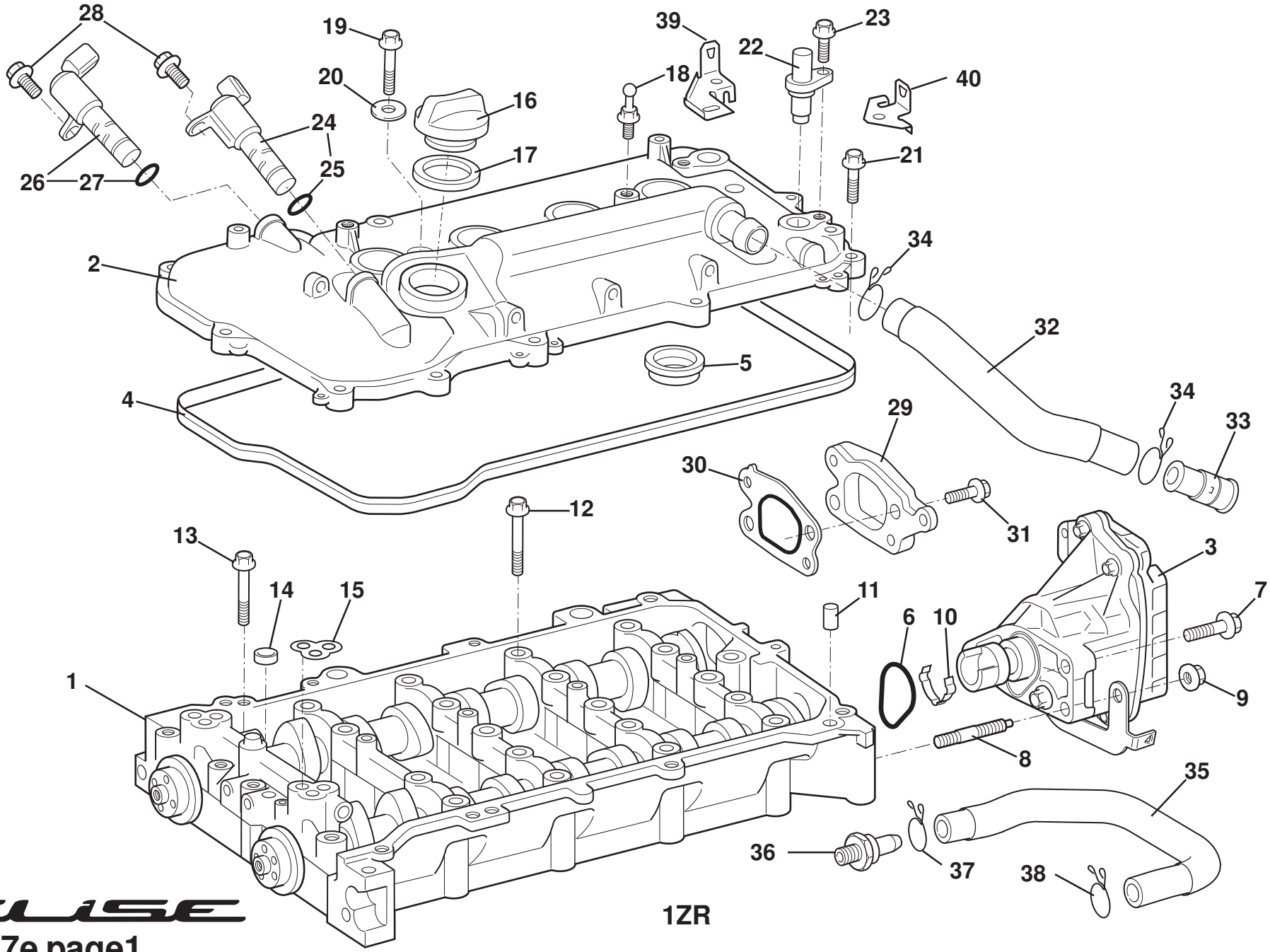

ELISE

40.07e page1

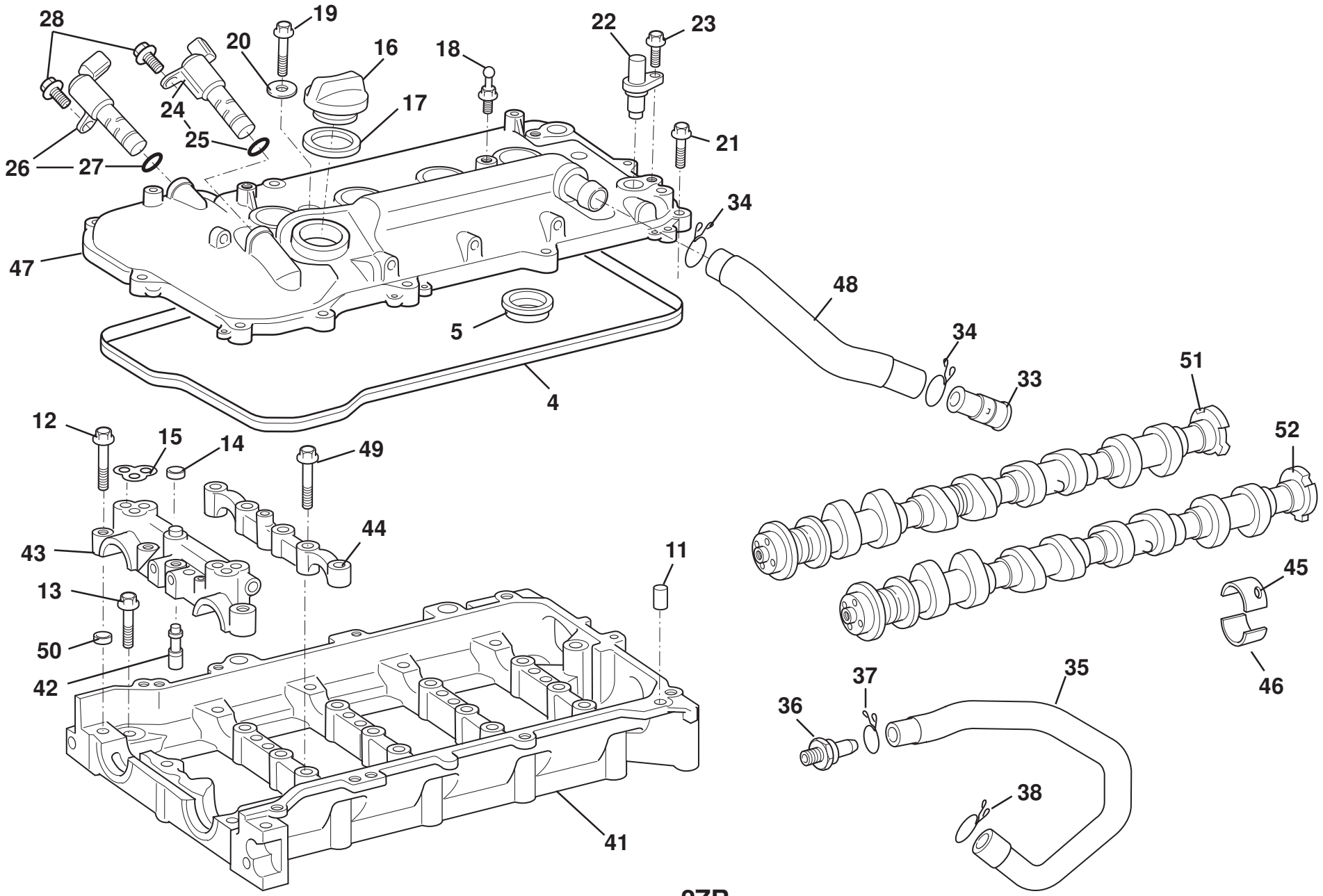

2ZR

ELISE

40.07e page2

Function Code 40.07e Camshafts, Tappets, Cam Cover, Elise 2011 MY, 1ZR, 2ZR

Dep	Part Description	Remarks	Option	Part Number	Qty
01	Camshaft Housing Assembly	Includes cams & controller	1ZR	**A120E7004S**	1
02	Cam Cover	Includes plug tube gaskets	1ZR	**A120E7113S**	1
03	Controller Assembly, inlet camshaft			**A120E7198S**	1
04	Gasket, cover to housing			**A120E7114S**	1
05	Gasket, spark plug tube			**A120E7112S**	4
06	'O' Ring, controller to housing			**A120E7292S**	1
07	Bolt, hex. flg. hd., controller to housing			**A120E7281S**	1
08	Stud., controller to housing			**A131E6192S**	2
09	Nut, flange, controller to housing			**A132E6474S**	2
10	Clip, controller drive connection			**A120E7199S**	1
11	Dowel			**A131E6199S**	3
12	Bolt, hex. flg. hd., cap to housing			**A120F7168S**	16
13	Bolt, hex. flg. hd., cap to housing			**A120E7282S**	1
14	Dowel, ring			**A132E6130S**	1
15	Gasket, cam bearing cap			**A120E7110S**	2
16	Oil Filler Cap	Includes gasket		**A120E7123S**	1
17	Gasket, oil filler cap			**A120E7253S**	1
18	Bolt, special, cover retention	For cover see 10.13b		**A120E7232S**	2

Function Code 40.07e Camshafts, Tappets, Cam Cover, Elise 2011 MY, 1ZR, 2ZR

Dep	Part Description	Remarks	Option	Part Number	Qty
19	Bolt, hex. flg. hd., cover to housing			**A120E7271S**	4
20	Washer, flat, cover to housing			**A132E6129S**	4
21	Bolt, hex. flg. hd., cover to housing			**A132E6423S**	12
22	Sensor, cam position	Also see 17.06		**A132E6283S**	2
23	Bolt, hex. flg. hd., sensor to cover			**A132E7232S**	2
24	Valve Assembly, cam timing control, inlet	Includes 'O' ring		**A120E7163S**	1
25	'O' Ring, valve assembly to cover			**A132E6419S**	1
26	Valve Assembly, cam timing control, exhaust	Includes 'O' ring		**A120E7164S**	1
27	'O' Ring, valve assembly to cover			**A132E6419S**	1
28	Bolt, hex. flg. hd., valve to cover			**A132E6249S**	2
29	Bracket, vacuum pump			**A120E7134S**	1
30	Gasket, bracket to housing			**A120E7111S**	1
31	Bolt, hex. flg. hd., bracket to housing			**A132E6468S**	2
32	Hose, breather, cam cover to intake hose		1ZR	**A120E7128S**	1
33	Spigot, hose to intake hose			**A120E7126S**	1
34	Hose Clamp, breather hose			**A132E6374S**	2
35	Hose, crankcase breather			**A120E7127S**	1
36	Spigot, hose to crankcase cover			**A120E7124S**	1
37	Hose Clamp, hose to cover spigot			**A120E7254S**	1
38	Hose Clamp, hose to plenum			**A120E7256S**	1
39	Bracket, engine harness LH front		1ZR	**A120E0106F**	1

Function Code 40.07e Camshafts, Tappets, Cam Cover, Elise 2011 MY, 1ZR, 2ZR

Dep	Part Description	Remarks	Option	Part Number	Qty
40	Bracket, engine harness RH rear		1ZR	**A120E0105F**	1
41	Camshaft Housing	Includes items 43, 44, 49 & 50	2ZR	**A120E6588S**	1
42	Filter, oil control valve		2ZR	**A120E6589S**	1
43	Cap Camshaft Bearing No.1	Not available separately order item 41	2ZR	**A120E6590S**	1
44	Cap Camshaft Bearing No.2	Not available separately order item 41	2ZR	**A120E6591S**	4
45	Bearing Upper		2ZR	**A120E6592S**	2
46	Bearing Lower		2ZR	**A120E6593S**	2
47	Cam Cover Assembly		2ZR	**A120E6594S**	1
48	Hose, breather, cam cover to intake hose		2ZR	**A120E6622S**	1
49	Bolt, hex. flg. hd., cap to housing		2ZR	**A132E6457S**	10
50	Dowel, ring		2ZR	**A120E6596S**	10
51	Camshaft Exhaust		2ZR	**A120E6598S**	1
52	Camshaft Inlet		2ZR	**A120E6597S**	1

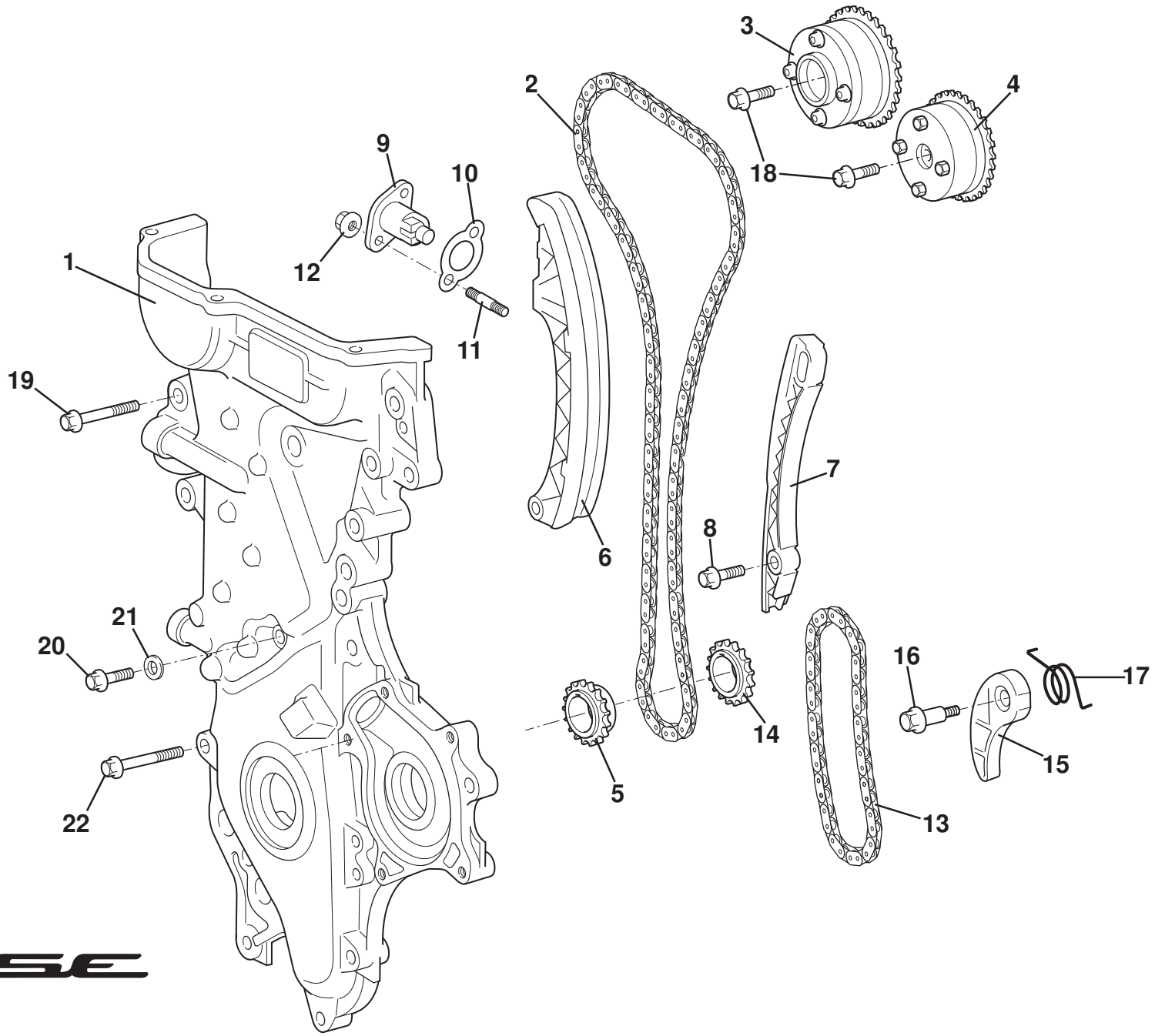

ELISE

40.08b

Function Code 40.08b Camshaft, Chain & Sprockets, Elise 2011 MY, 1ZR, 2ZR

Dep	Part Description	Remarks	Option	Part Number	Qty
01	Timing Chain Cover	Incl. water pump, see 40.13c		**A120E7116S**	1
02	Timing Chain		1ZR	**A120E7146S**	1
02a	Timing Chain		2ZR	**A120E6599S**	1
03	Camshaft Drive Sprocket, exhaust			**A120E7140S**	1
04	Camshaft Drive Sprocket, inlet			**A120E7139S**	1
05	Drive Sprocket, timing chain	Also see 40.11c		**A120E7149S**	1
06	Chain Tension Slipper			**A120E7153S**	1
07	Chain Vibration Damper		1ZR	**A120E7154S**	1
07a	Chain Vibration Damper		2ZR	**A120E6600S**	1
08	Bolt, hex. flg. hd., damper retention			**A120E7233S**	2
09	Chain Drive Tensioner			**A120E7150S**	1
10	Gasket, tensioner to cover			**A120E7152S**	1
11	Stud, tensioner to cover			**A120E7283S**	2
12	Nut, flange, tensioner to cover			**A132E6473S**	2
13	Drive Chain, oil pump			**A120E7147S**	1
14	Drive Sprocket, oil pump chain	Also see 40.11c		**A120E7148S**	1
15	Chain Tension Slipper, oil pump drive chain			**A120E7151S**	1
16	Bolt, shoulder, hex. flg. hd., slipper retention			**A120E7231S**	1

Function Code 40.08b Camshaft, Chain & Sprockets, Elise 2011 MY, 1ZR, 2ZR

Dep	Part Description	Remarks	Option	Part Number	Qty
17	Spring, chain tensioner			**A120E7155S**	1
18	Bolt, hex. flg. hd., sprocket to camshaft			**A120E6205S**	2
19	Bolt, hex. flg. hd., cover to engine			**A120E7273S**	14
20	Bolt, hex. flg. hd., cover to engine			**A120E7275S**	1
21	Washer, flat, cover to engine			**A120E7245S**	1
22	Bolt, hex. flg. hd., cover to engine			**A120E7278S**	4

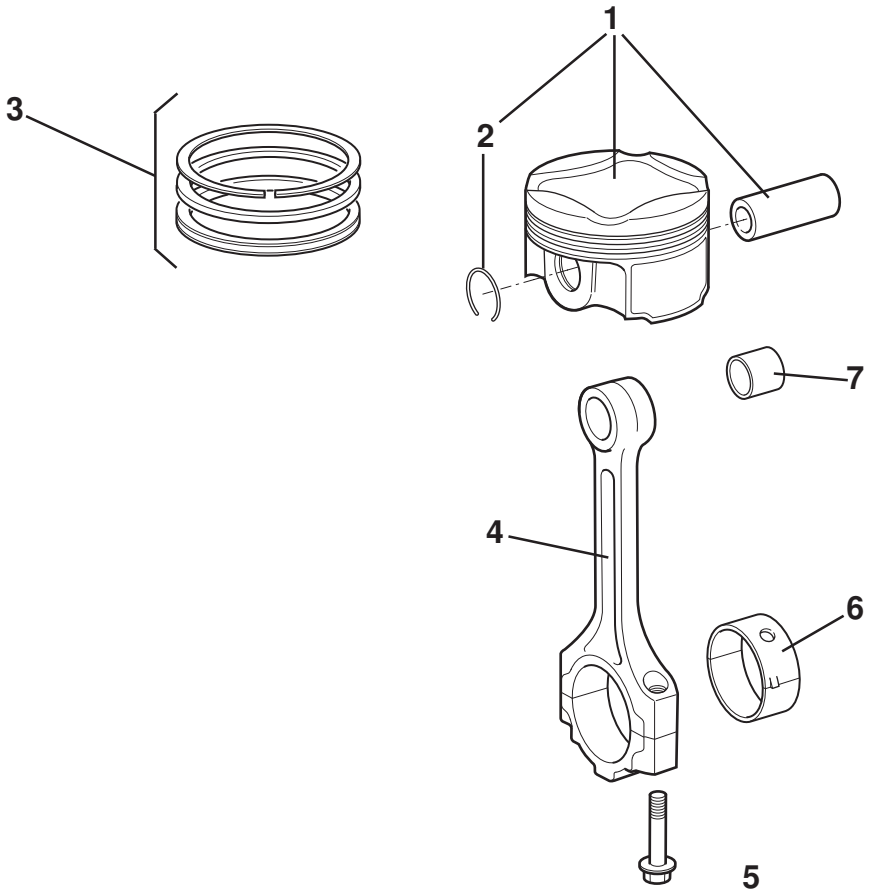
1
2
3
4
5
6
7

Function Code 40.09c Pistons, Con-rods, Liners, Elise 2011 MY, 1ZR, 2ZR

Dep	Part Description	Remarks	Option	Part Number	Qty
01	Piston Assembly	Includes gudgeon pin, circlips	1ZR	**A120E7141S**	4
01a	Piston Assembly	Includes gudgeon pin, circlips,	2ZR	**A120E6601S**	4
02	Circlip, gudgeon pin retaining			**A120E6189S**	8
03	Piston Ring Set			**A120E7135S**	4
04	Connecting Rod		1ZR	**A120E7142S**	4
04a	Connecting Rod		2ZR	**A120E6602S**	4
05	Bolt, hex. flg. hd., cap to rod		1ZR	**A131E6102S**	8
05a	Bolt, hex. flg. hd., cap to rod		2ZR	**A120E6603S**	8
06	Con-rod Bearing Set, (size 1)*		1ZR	**A120E7136S**	4
06a	Con-rod Bearing Set, (size 2)*		1ZR	**A120E7137S**	4
06b	Con-rod Bearing Set, (size 3)*		1ZR	**A120E7138S**	4
06c	Con-rod Bearing Set, (size 1)*		2ZR	**A120E6604S**	4
06d	Con-rod Bearing Set, (size 2)*		2ZR	**A120E6605S**	4
06e	Con-rod Bearing Set, (size 3)*		2ZR	**A120E6606S**	4
07	Bush, co-rod upper		1ZR	**A120E7269S**	4
07a	Bush, co-rod upper		2ZR	**A120E6607S**	4
		*Refer to engine manual for size required			

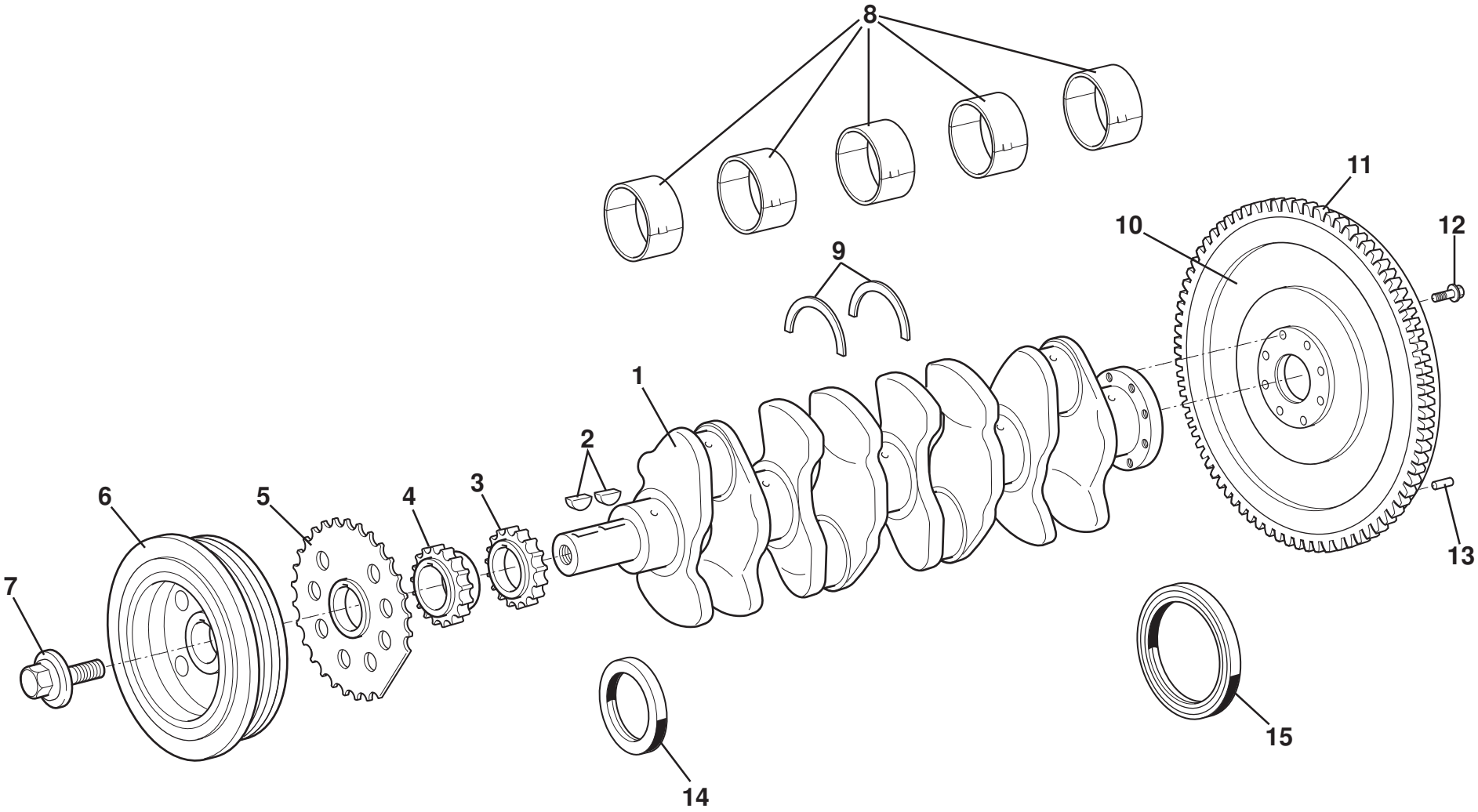

ELISE

40.11c

Service Parts List ELISE

Function Code 40.11c Crankshaft, Bearings, Flywheel, Elise 2011 MY, 1ZR, 2ZR

Dep	Part Description	Remarks	Option	Part Number	Qty
01	Crankshaft	Includes keys	1ZR	**A120E7143S**	1
01a	Crankshaft	Includes keys	2ZR	**A120E6608S**	1
02	Woodruff Key, crankshaft to pulley & sprockets			**A120E7248S**	2
03	Drive Sprocket, oil pump			**A120E7148S**	1
04	Drive Sprocket, timing chain			**A120E7149S**	1
05	Plate, crank angle sensor			**A120E7195S**	1
06	Pulley, auxiliary drive belt			**A120E7145S**	1
07	Bolt, with washer, pulley to crankshaft			**A120E7239S**	1
08	Main Bearing Set, size 1 (pair)*		1ZR	**A120E7119S**	5
08a	Main Bearing Set, size 2 (pair)*		1ZR	**A120E7120S**	5
08b	Main Bearing Set, size 3 (pair)*		1ZR	**A120E7121S**	5
08c	Main Bearing Set, size 4 (pair)*		1ZR	**A120E7122S**	5
08d	Main Bearing Set, size 1 (upper)*		2ZR	**A120E6609S**	5
08e	Main Bearing Set, size 2 (upper)*		2ZR	**A120E6610S**	5
08f	Main Bearing Set, size 3 (upper)*		2ZR	**A120E6611S**	5
08g	Main Bearing Set, size 4 (upper)*		2ZR	**A120E6612S**	5
08h	Main Bearing Set, size 1 (lower)*		2ZR	**A120E6613S**	5
08i	Main Bearing Set, size 2 (lower)*		2ZR	**A120E6614S**	5

Function Code 40.11c Crankshaft, Bearings, Flywheel, Elise 2011 MY, 1ZR, 2ZR

Dep	Part Description	Remarks	Option	Part Number	Qty
08j	Main Bearing Set, size 3 (lower)*		2ZR	**A120E6615S**	5
08k	Main Bearing Set, size 4 (lower)*		2ZR	**A120E6616S**	5
09	Thrust Washer			**A120E6156S**	2
10	Flywheel Assembly	Includes starter gear ring		**A120E7144S**	1
11	Starter Gear Ring	P/O flywheel assy.		**A120E7143S**	1
12	Bolt, hex. flg. hd., flywheel to crankshaft			**A120E7263S**	8
13	Dowel, clutch cover to flywheel			**A132E6156S**	3
14	Oil Seal, crankshaft front			**A120E7251S**	1
15	Oil Seal, crankshaft rear			**A120E7250S**	1
		*Refer to engine manual for size required			

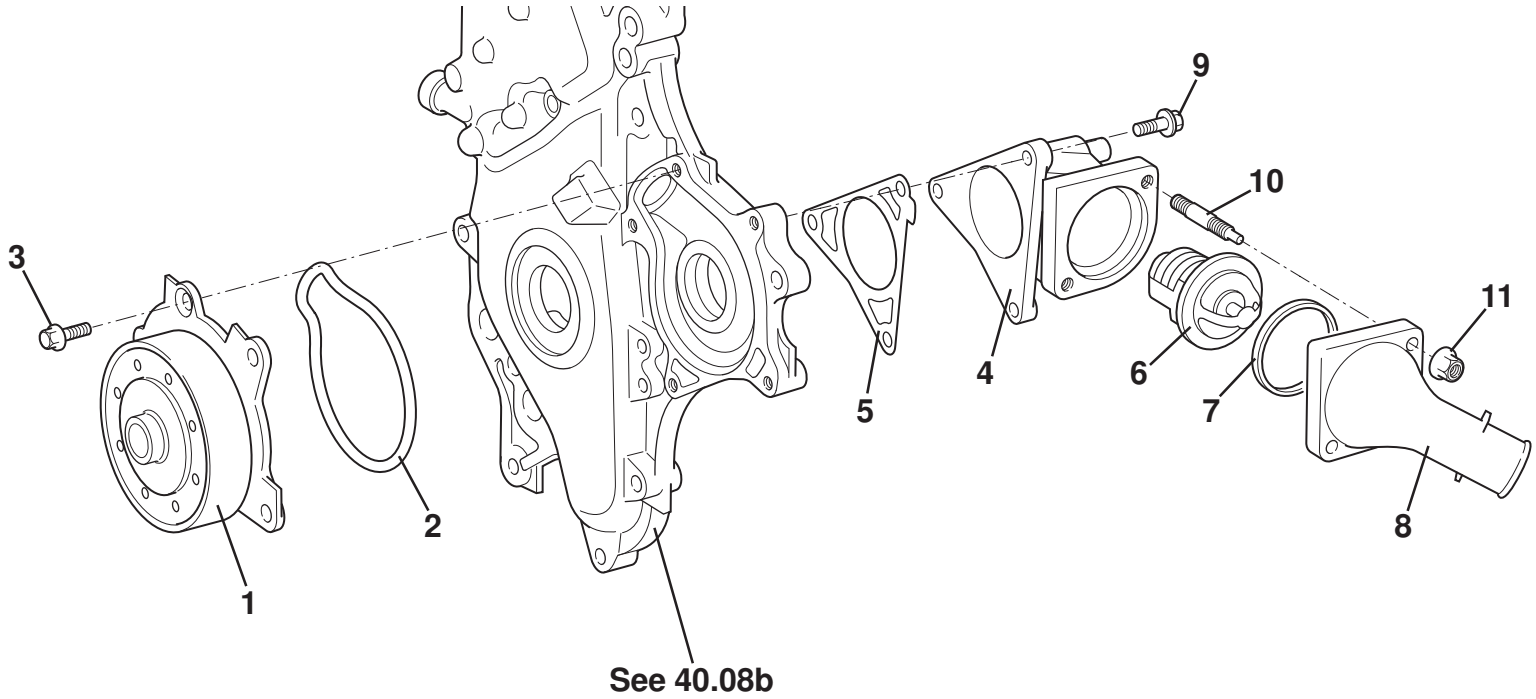
3
1
2
See 40.08b
5
4
9
10
6
7
11
8

Service Parts List ELISE

Function Code 40.13c Water Pump Assy. Thermostat, Elise 2011 MY, 1ZR, 2ZR

Dep	Part Description	Remarks	Option	Part Number	Qty
01	Water Pump Assembly			**A120E7169S**	1
02	Gasket, water pump			**A120E7175S**	1
03	Bolt, hex. flg. hd., pump to timing cover			**A132E6468S**	5
04	Thermostat Housing			**A120E7177S**	1
05	Gasket, thermostat housing			**A120E7179S**	1
06	Thermostat		1ZR	**A120E7265S**	1
06a	Thermostat		2ZR	**A120E6315S**	1
07	Gasket, thermostat			**A120E7178S**	1
08	Inlet Spigot, thermostat			**A120E7176S**	1
09	Bolt, hex. flg. hd., housing to timing cover			**A132E6468S**	3
10	Stud, hosing to outlet			**A120E7241S**	2
11	Nut, flange, housing to outlet			**A132E6473S**	2

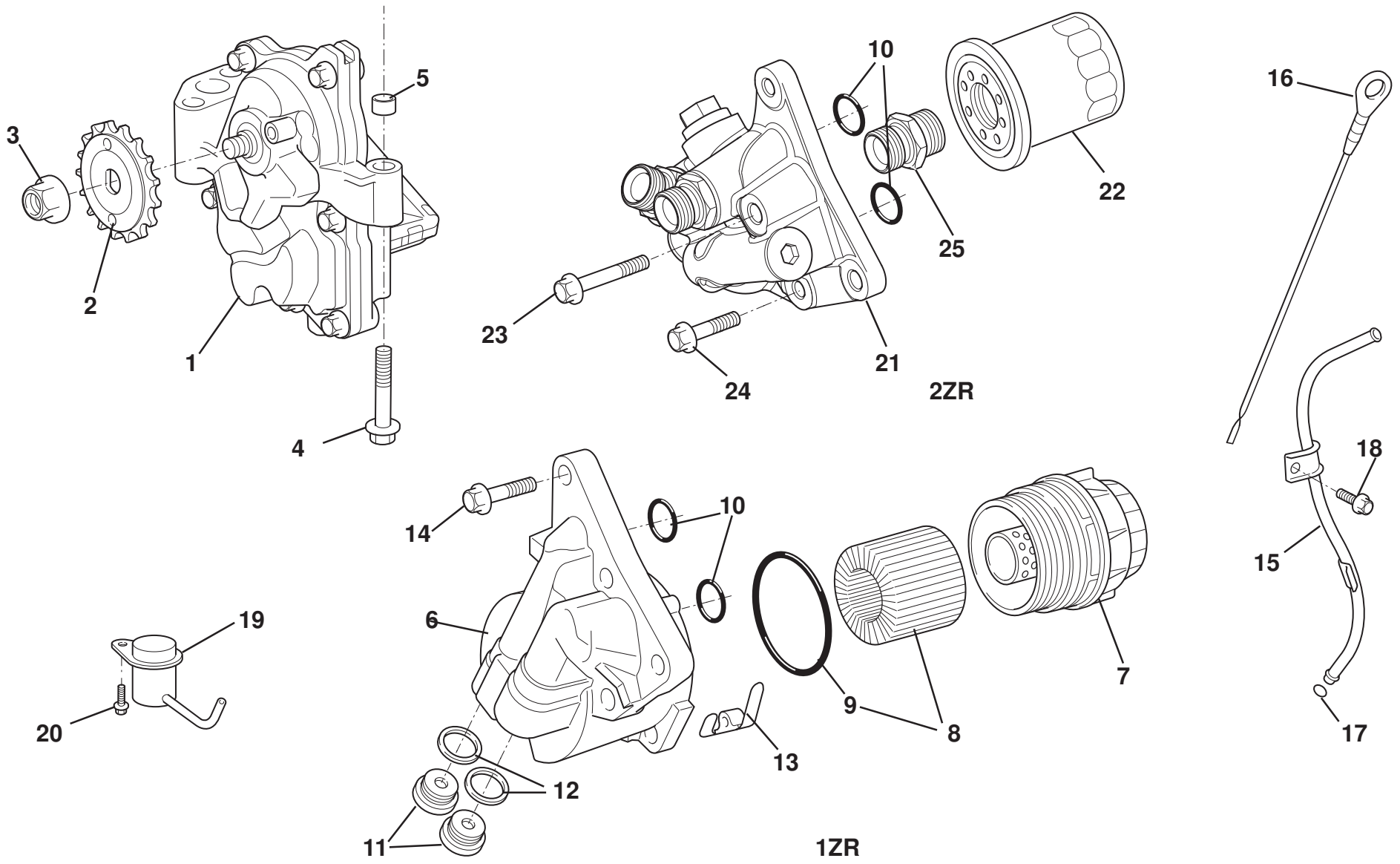

ELISE

40.15d

Service Parts List ELISE

Function Code 40.15d Lubrication System, Elise 2011 MY, 1ZR, 2ZR

Dep	Part Description	Remarks	Option	Part Number	Qty
01	Oil Pump Assembly		1ZR	**A120E7161S**	1
01a	Oil Pump Assembly		2ZR	**A120E6617S**	1
02	Sprocket, oil pump drive			**A120E7162S**	1
03	Nut, flange., sprocket to pump			**A120E7244S**	1
04	Bolt, hex. flg. hd., pump to engine			**A120E7272S**	3
05	Dowel, ring, pump to engine			**A132E6118S**	3
06	Oil Filter Housing		1ZR	**A120E7165S**	1
07	Cap Assembly, oil filter			**A120E7166S**	1
08	Oil Filter Element Kit	Includes 'O' ring, item 9	1ZR	**A120E7102S**	1
09	'O' Ring, filter to housing		1ZR	**A120E7249S**	1
10	'O' Ring, housing to engine			**A120E7289S**	2
11	Plug, blanking, oil filter housing			**A131F6055S**	2
12	Gasket, plug to housing			**A132E6107S**	2
13	Clip, oil filter housing			**A120E7167S**	1
14	Bolt, hex. flg. hd., housing to engine			**A120E7273S**	4
15	Dipstick Tube		1ZR	**A120E7118S**	1
15a	Dipstick Tube		2ZR	**A120E0140H**	1
16	Dipstick			**A132E6310S**	1

Function Code 40.15d Lubrication System, Elise 2011 MY, 1ZR, 2ZR

Dep	Part Description	Remarks	Option	Part Number	Qty
17	'O' Ring, tube to engine			**A120E6281S**	1
18	Bolt, hex. flg. hd., tube to engine			**A132E6249S**	1
19	Nozzle, oil feed			**A120E7168S**	4
20	Bolt, hex. flg. hd., nozzle retaining			**A132E6247S**	4
21	Oil Filter Housing		2ZR	**A120E0133F**	1
22	Oil Filter		2ZR	**A131E6022S**	1
23	Bolt M8 x 75, hex flg, housing to engine		2ZR	**A120E0064F**	1
24	Bolt, hex. flg. hd., housing to engine			**A120E7273S**	3
25	Tube, threaded		2ZR	**B132E0069F**	

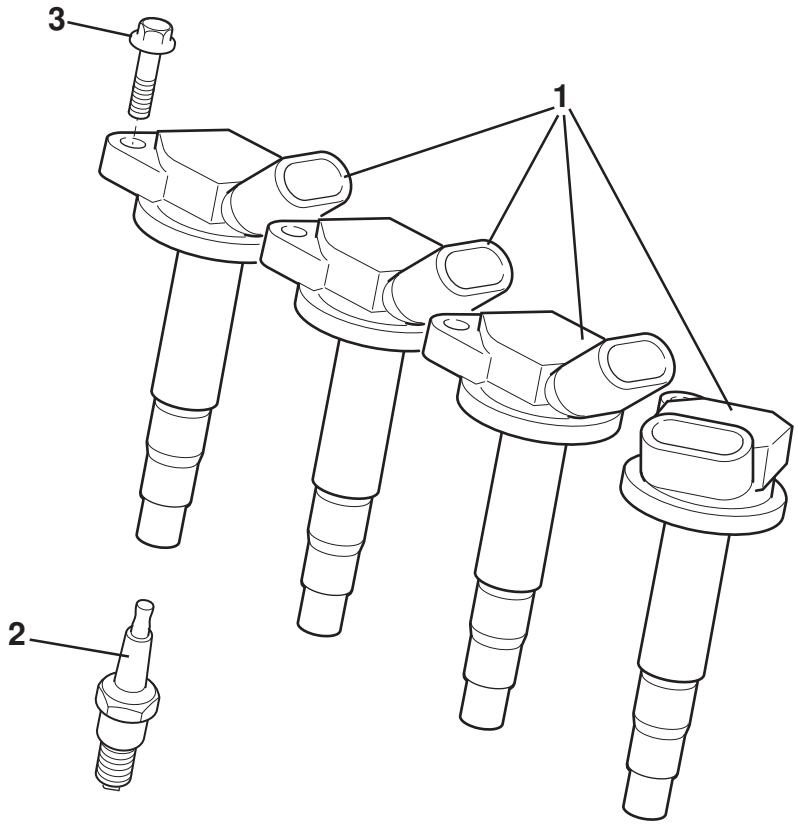
3
1
2

Service Parts List

Function Code 40.17c Ignition System, Spark plugs & Coils, Elise 2011 MY on, 1ZR, 2ZR

Dep	Part Description	Remarks	Option	Part Number	Qty
01	Plug Top Coil,			**A120E7267S**	4
02	Spark Plug,		1ZR	**A120E7266S**	4
02a	Spark Plug, NGK ILKAR7G9,		2ZR	**A120E0157F**	4
3	Bolt, hex. flg. hd., coil retention			**A132E6423S**	4

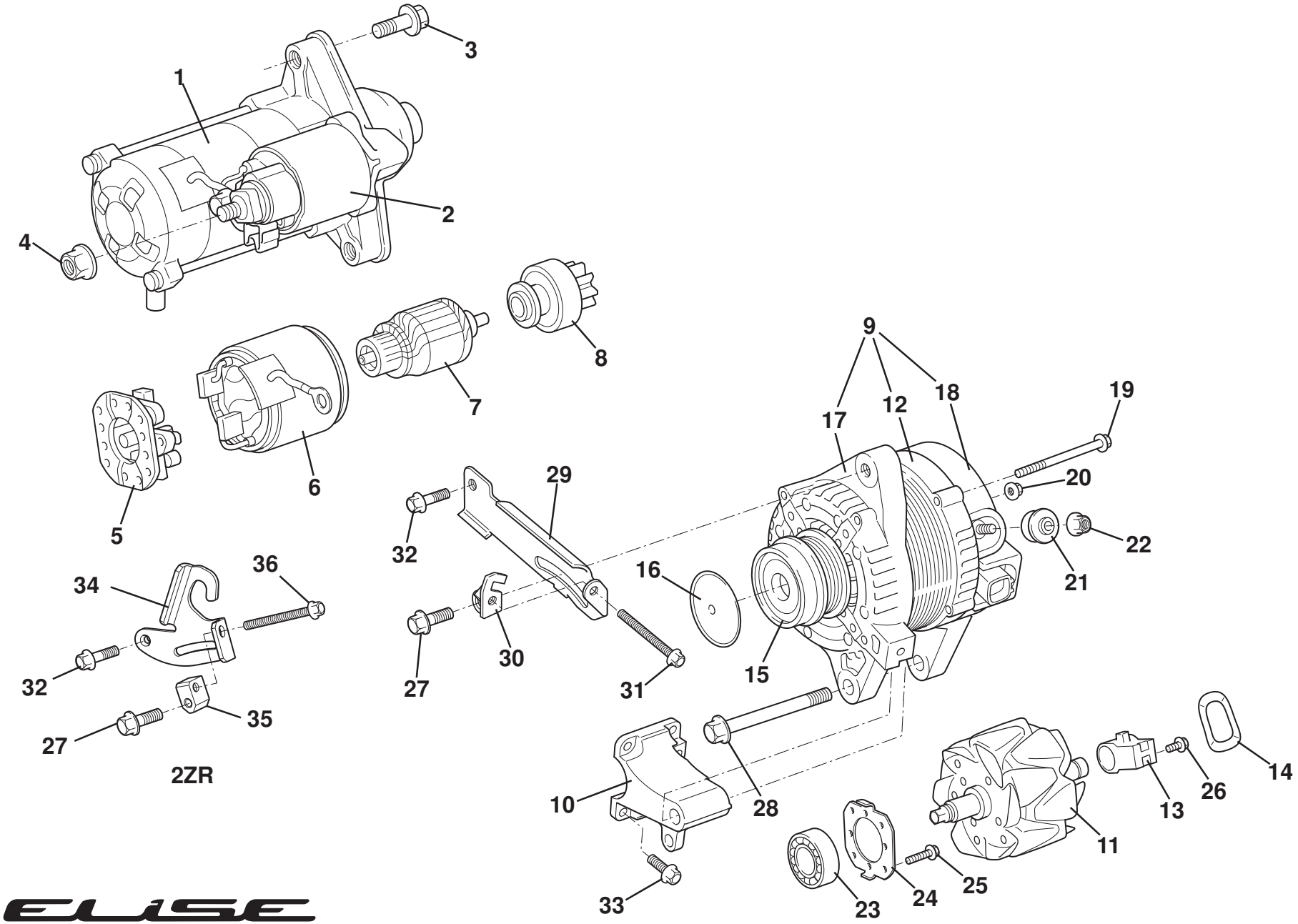
1
2
3
4
5
6
7
8
9
10
11
12
13
14
15
16
17
18
19
20
21
22
23
24
25
26
27
28
29
30
31
32
33
34
35
36
2ZR

ELISE

40.19c

Service Parts List

Function Code 40.19c Alternator and Starter Motor, Elise 2011 MY on, 1ZR, 2ZR

Dep	Part Description	Remarks	Option	Part Number	Qty
01	Starter Motor			**A120E7218S**	1
02	Solenoid Switch Assembly			**A120E7220S**	1
03	Bolt, hex. flg. hd., motor retaining			**A120E6402S**	2
04	Nut, flange, cable to solenoid			**A120E6401S**	1
05	Holder Assembly, starter brush			**A131E6146S**	1
06	Yoke Assembly, starter			**A120E7219S**	1
07	Armature Assembly, starter			**A131E6136S**	1
08	Clutch Assembly, starter			**A131E6134S**	1
09	Alternator, 12V 100Ahr			**A120E7208S**	1
10	Bracket, alternator		1ZR	**A120E7133S**	1
11	Rotor Assembly, alternator			**A120E7211S**	1
12	Coil Assembly, alternator			**A120E7212S**	1
13	Holder Assembly, alternator			**A120E7213S**	1
14	Washer, wavy			**A120E7214S**	1
15	Pulley/Clutch Assembly			**A120E7216S**	1
16	Cap, pulley			**A120E7217S**	1
17	Housing Assembly, front	Includes items: 23, 24, 25		**A120E7209S**	1
18	Cover Assembly, rear			**A120E7207S**	1

Function Code 40.19c Alternator and Starter Motor, Elise 2011 MY on, 1ZR, 2ZR

Dep	Part Description	Remarks	Option	Part Number	Qty
19	Bolt, hex. flg. hd., coil to housing			**A120E7228S**	4
20	Nut, flange, cap retention			**A120E7229S**	3
21	Insulation Washer, terminal			**A120E7215S**	1
22	Nut, flange, terminal retention			**A132E6473S**	1
23	Bearing, ball, alternator	P/O item 17		**A120E7230S**	1
24	Plate, bearing retention	P/O item 17		**A120E7210S**	1
25	Screw, hex. flg. hd., plate to housing	P/O item 17		**A120E7226S**	4
26	Screw, hex. flg. hd., holder retention			**A120E7227S**	2
27	Bolt, hex. flg. hd., alternator upper fixing			**A120E7235S**	1
28	Bolt, hex. flg. hd., alternator lower fixing			**A120F7169S**	1
29	Bar, drive belt adjusting			**A120E7180S**	1
30	Slider Assembly, drive belt adjusting		1ZR	**A120E7181S**	1
31	Bolt, hex. flg. hd., drive belt adjusting			**A120E7167S**	1
32	Bolt, hex. flg. hd., bar to engine			**A120E7279S**	1
33	Bolt, hex. flg. hd., bracket to engine		1ZR	**A132E6140S**	1
34	Bracket Alternator Tensioner		2ZR	**A120E0168F**	1
35	Block belt adjustment		2ZR	**A120E0169F**	1
36	Screw M8 x 75 Alternator adjusment		2ZR	**A138W1000F**	1

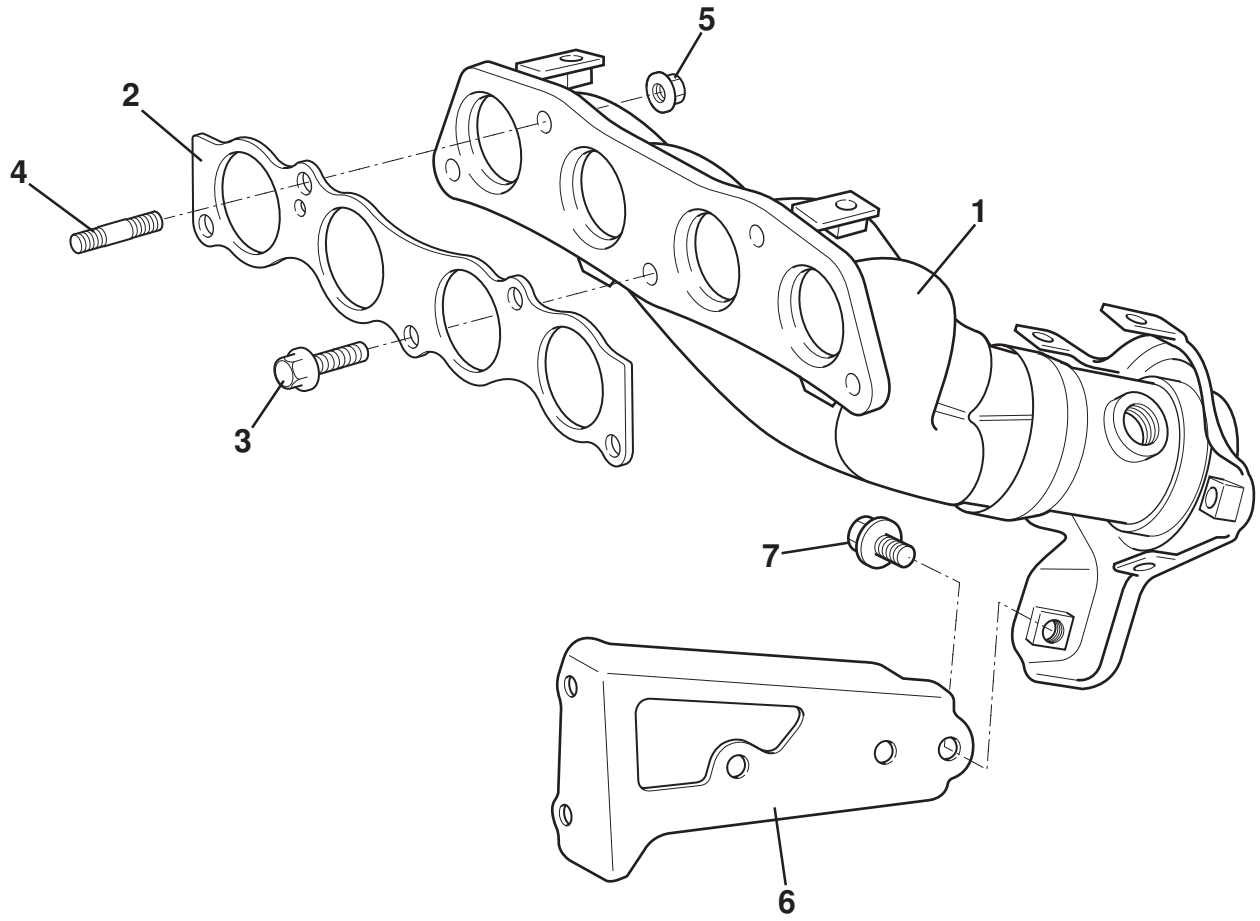

ELISE

40.21d

Function Code 40.21d Exhaust Manifold, Elise 2011 MY on, 1ZR, 2ZR

Dep	Part Description	Remarks	Option	Part Number	Qty
01	Exhaust Manifold		1ZR	**A120E7186S**	1
01a	Exhaust Manifold		2ZR	**A120E6618S**	1
02	Gasket, exhaust manifold			**A120E7189S**	1
03	Bolt, hex. flg. hd., manifold to head			**A120E7238S**	3
04	Stud, manifold to head			**A131E6192S**	2
05	Nut, flange, manifold to head			**A132E6394S**	2
06	Stay, exhaust manifold			**A120E7183S**	1
07	Bolt, hex. flg. hd., stay to manifold			**A132E6047H**	1

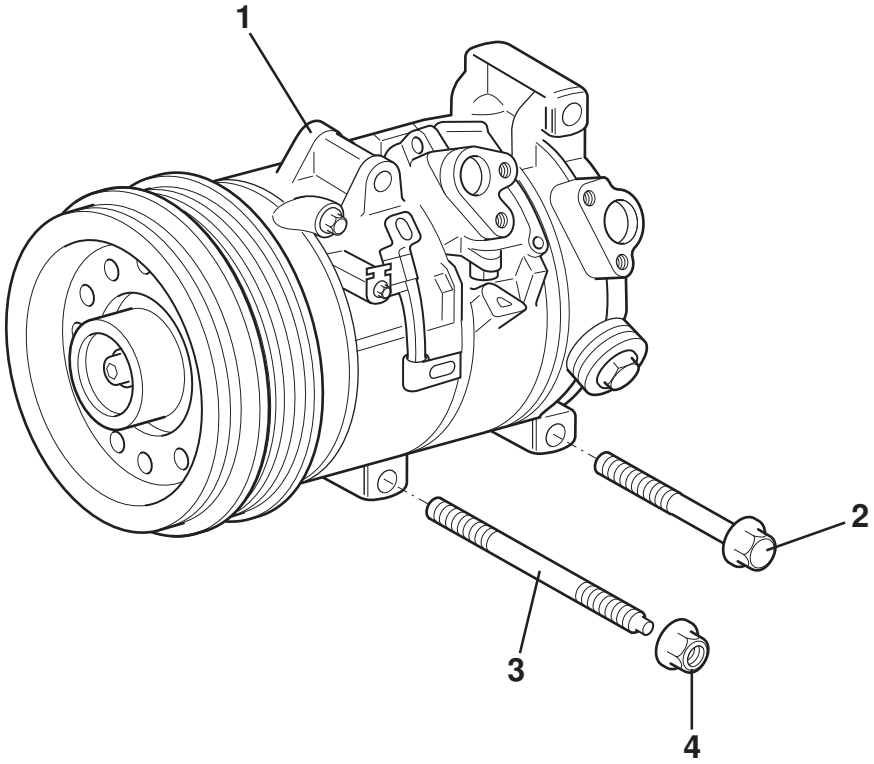
1
2
3
4

Function Code 40.23c AC Compressor, Elise 2011 MY on, 1ZR, 2ZR

Dep	Part Description	Remarks	Option	Part Number	Qty
01	AC Compressor PAG46 oil			**A120E7222S**	1
01a	AC Compressor, ND12 oil	Refer to SB 2016/21		**A120E6629H**	1
02	Bolt, hex. flg. hd., compessor to engine			**A120E7236S**	2
03	Stud, compessor to engine			**A120E6625S**	2
04	Nut, flange, compessor to engine			**A132E6474S**	2

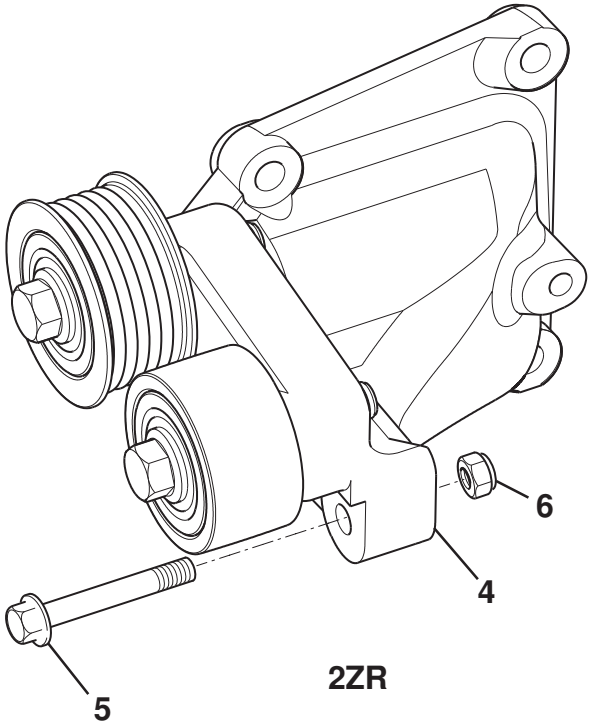

2ZR

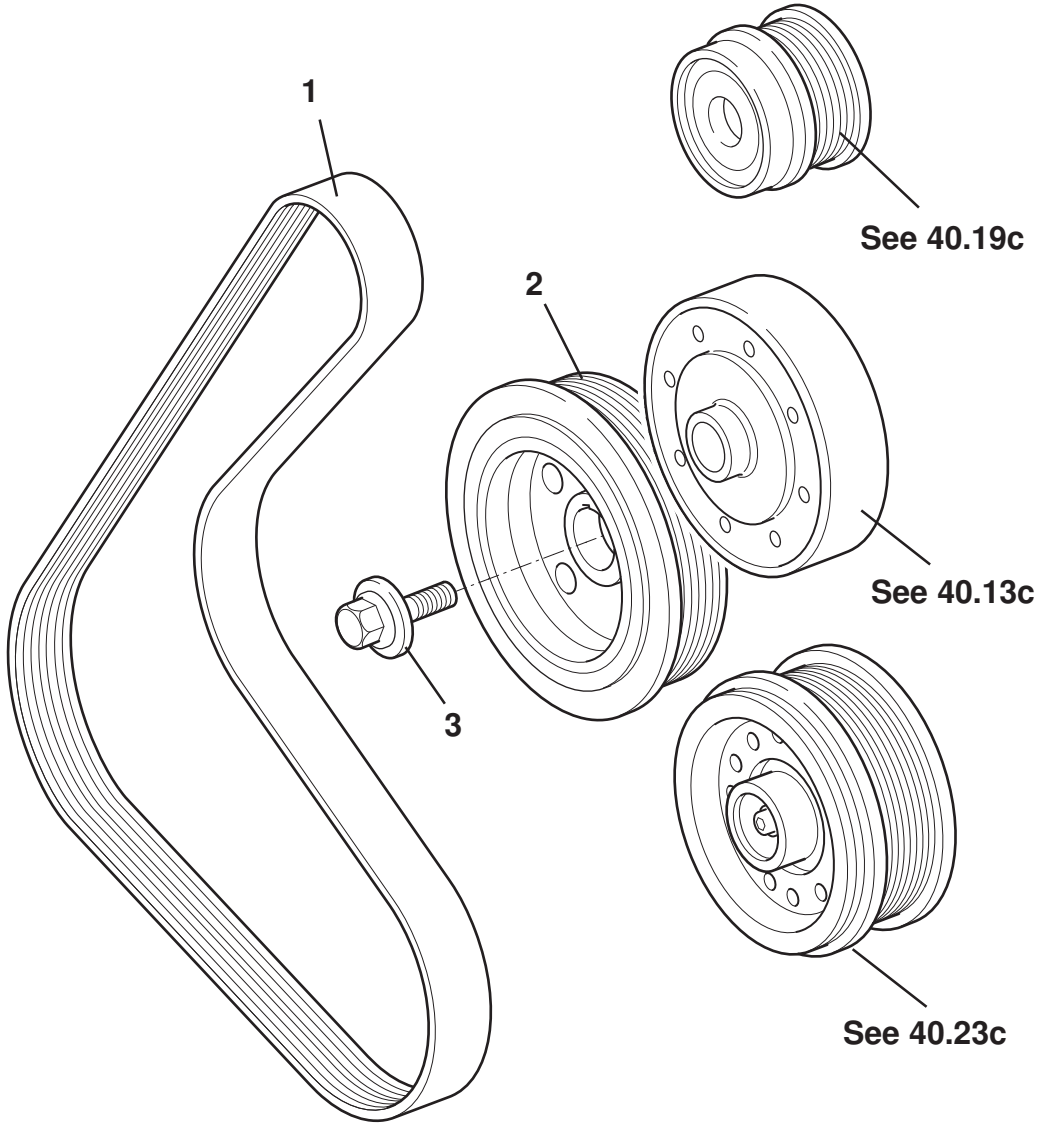

Function Code 41.03c Auxiliary Drive Belts & Pulleys, Elise 2011 MY, 1ZR, 2ZR

Dep	Part Description	Remarks	Option	Part Number	Qty
01	Drive Belt, AC, water pumps, + alternator		1ZR	**A120E7264S**	1
01a	Drive Belt, water pumps, + alternator		1ZR	**A120E7290S**	1
01b	Drive Belt, AC, water pumps, + alternator + s/charger		2ZR	**A120E6582F**	1
01c	Drive Belt, water pumps, + alternator + s/charger		2ZR	**B120E0159F**	1
02	Pulley, crankshaft	Also see 40.11c		**A120E7145S**	1
03	Bolt, with washer, pulley to crankshaft	Also see 40.11c		**A120E7239S**	1
04	Supercharger Nose Support Assembly		2ZR	**B120E0136F**	1
05	Screw M8 x 75 hex flg		2ZR	**A138W1000F**	1
06	Nyloc Nut, M8		2ZR	**A075W3010Z**	1

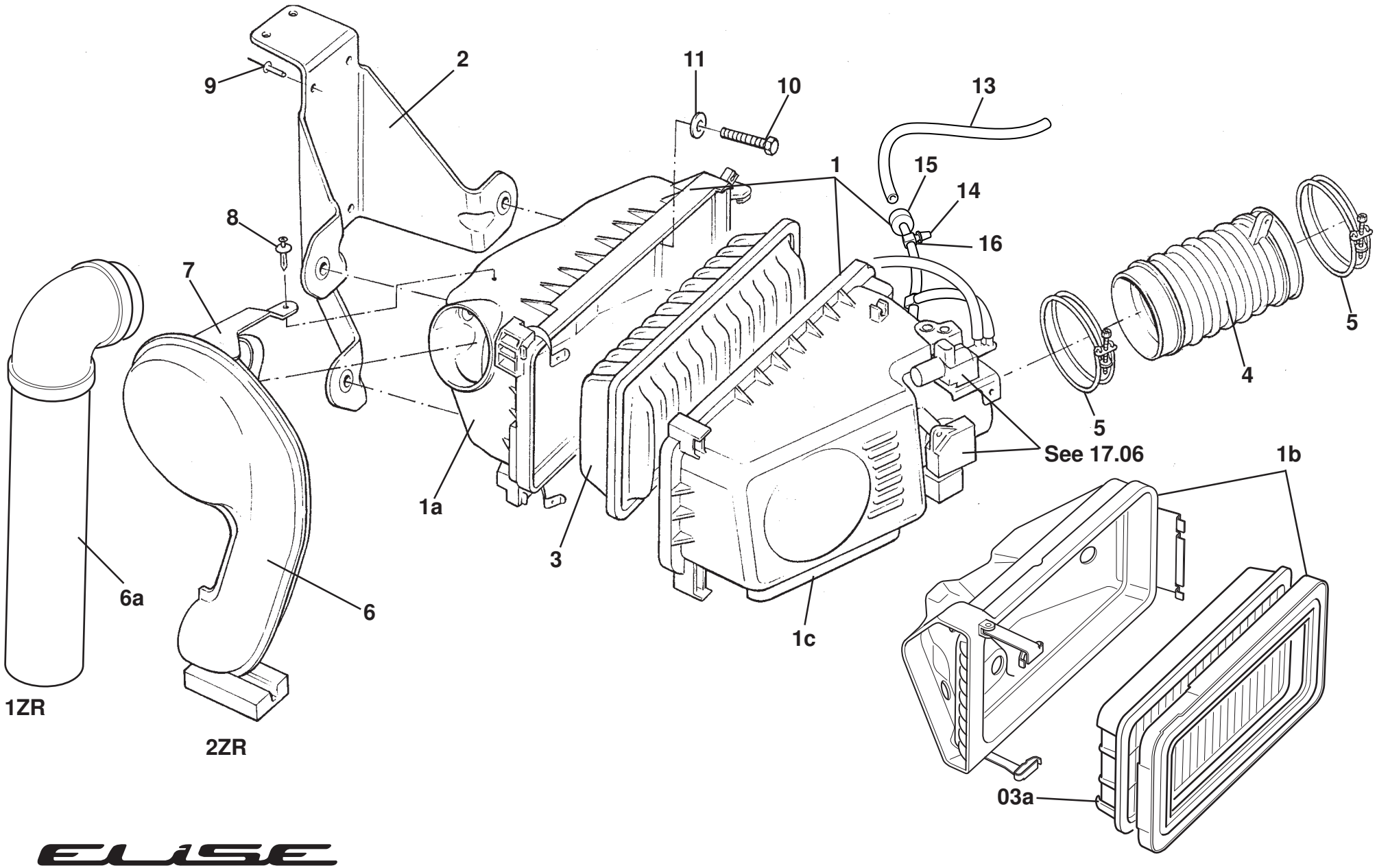

ELISE

42.01

Function Code 42.01 Airboxes, Trunking & Air Filters

Dep	Part Description	Remarks	Option	Part Number	Qty
01	Airbox Assembly Complete	Includes element and valves & sensor	2ZR	**A120E6383S**	1
01a	Airbox Sub-assembly Lower	Includes flap valve	Common	**A120E6476S**	1
01b	Airbox Lower + Sandwich Plate		Accessory upgrade	**A127E6002F**	1
01c	Airbox Assembly Cap	Includes sensor	1ZR(2ZR cap not available seperately)	**A120E7194S**	1
02	Bracket, air cleaner mounting		Common	**A120E0004F**	1
03	Element, air cleaner		Common	**A120E6385S**	1
03a	Element, air cleaner	For use with item1b	Accessory upgrade	**A127E6003F**	1
03b	Element, air cleaner, sports	For use with item1	Accessory only	**ALS3E6020F**	1
04	Hose, airbox to throttle body, 1ZR		1ZR	**A120E0098F**	1
04a	Hose, airbox to throttle body, 2ZR		2ZR	**C120E0137F**	1
05	Hose Clip, hose to throttle body			**A120E6388S**	1
06	Air Intake Snorkel Assembly, 2ZR			**B120E0003F**	1
06a	Air Intake Snorkel Assembly, 1ZR			**A131E0010F**	1
07	Bracket, air intake snorkel mounting	Bonded to snorkel		**A120E0028H**	1
08	Plastic Fastener, bracket to airbox			**A082W6528F**	1
09	Pop Rivet, bracket to bulkhead			**A111W6614F**	6
10	Screw, M8 x 35, hex. hd., airbox to bracket			**A075W1041Z**	3

Function Code 42.01 Airboxes, Trunking & Air Filters

Dep	Part Description	Remarks	Option	Part Number	Qty
11	Washer, flat, M8 x 20 x 1.4, airbox to bracket			**A082W4165F**	3
13	Hose, vacuum, 245mm, valve, vacuum switching to manifold			**A121E0008F**	1
13a	Hose, vacuum, supercharger to airbox	Cut to length	2ZR	**A116M0040F**	450mm
14	Blanking Plug, vacuum hose 'T' piece			**A120W6758F**	1
15	Valve One Way			**A120E6444S**	1
16	'T' Piece			**A082J6089F**	2

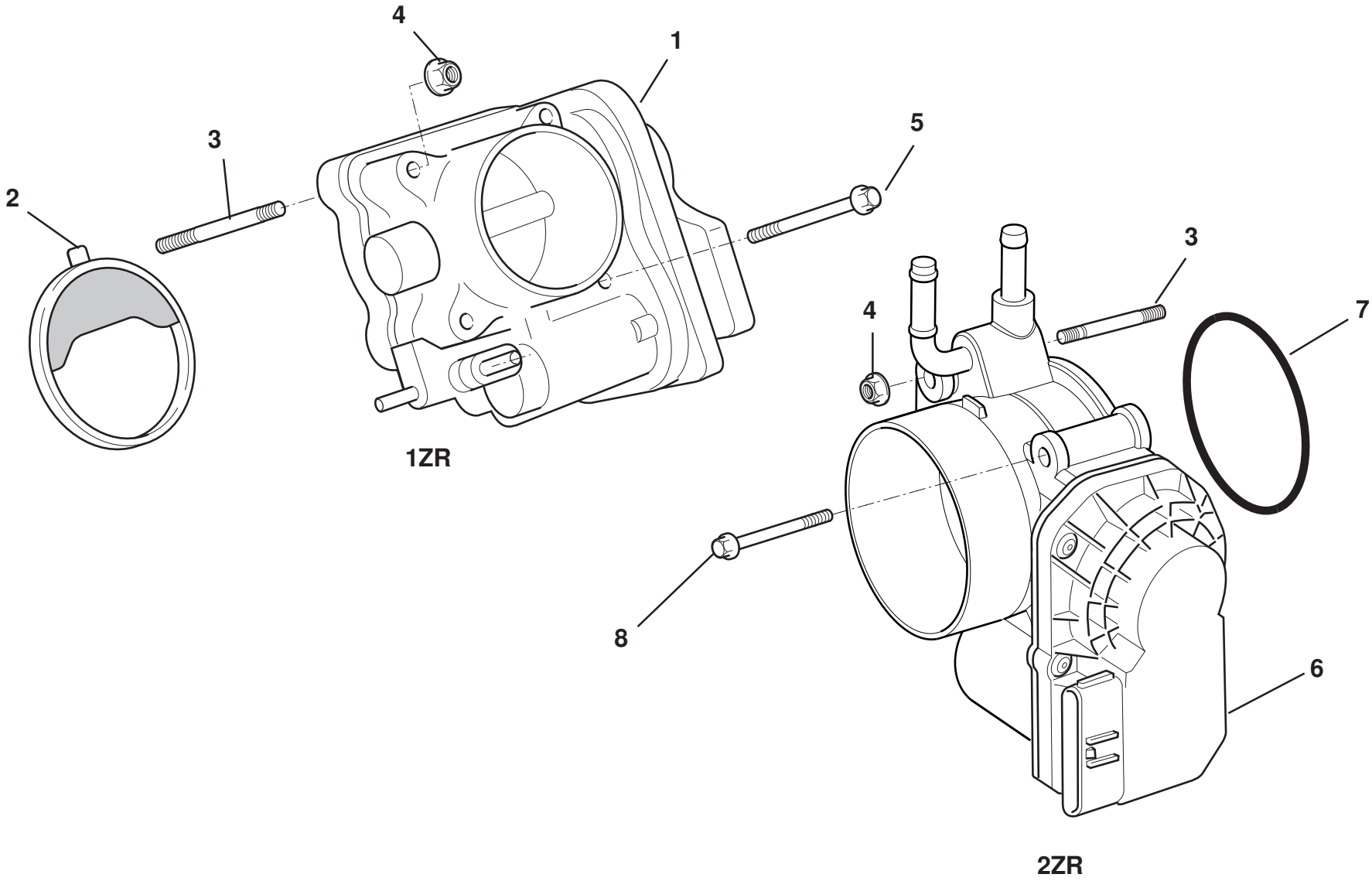

ELISE

42.04b

Updated 2nd October2017

Function Code 42.04b Throttle Body & IAC Valve, Elise 2011 MY, 1ZR, 2ZR

Dep	Part Description	Remarks	Option	Part Number	Qty
01	Throttle Body Assembly		1ZR	**A120E7196S**	1
02	Gasket, throttle body to manifold		1ZR	**A120E7197S**	1
03	Stud, throttle body to manifold			**A120E7242S**	2
04	Nut, flange, throttle body to manifold			**A132E6473S**	2
05	Bolt, hex. flg. hd., throttle body to manifold		1ZR	**A132E6379S**	2
06	Throttle Body Assembly		2ZR	**A120E6568F**	1
07	O Ring, throttle body to manifold		2ZR	**A120E0158F**	1
08	Bolt M6 x 50 hex flg, throttle body		2ZR	**A128W2219F**	4

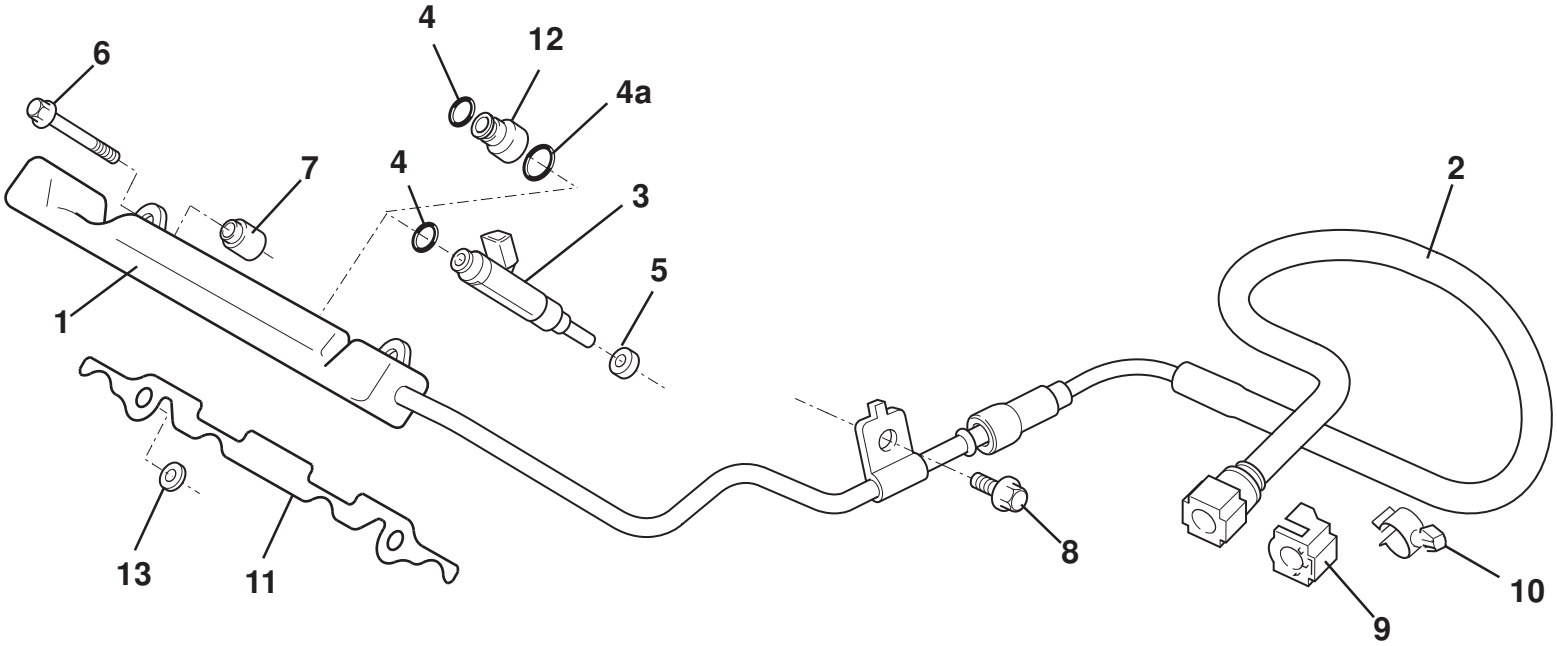

ELISE

42.05b

Updated 4th September2017

Function Code 42.05b Fuel Injection System, Elise 2011 MY, 1ZR, 2ZR

Dep	Part Description	Remarks	Option	Part Number	Qty
01	Fuel Rail			**A120E7202S**	1
02	Hose Assembly, fuel rail			**B120L0067F**	1
03	Fuel Injector	Includes 'O' ring, item 4	1ZR	**A120E7200S**	4
03a	Fuel Injector	Includes 'O' ring, item 4	2ZR	**A120E6575H**	4
04	'O' Ring, fuel injector			**A131E6160S**	4
04a	'O' Ring, fuel injector		2ZR	**A132E6460S**	4
05	Insulator, fuel injector			**A120E7201S**	4
05a	Insulator, fuel injector		2ZR	**A120E6621S**	4
06	Bolt, hex. flg. hd., rail to manifold			**A120E7276S**	2
06a	Bolt M8 x 55, hex. flg. hd., rail to manifold		2ZR	**A120W2216F**	2
07	Spacer, rail to manifold		1ZR	**A120E7205S**	2
07a	Spacer Fuel Rail		2ZR	**A120E0161F**	2
08	Bolt, hex. flg. hd., rail retention			**A132E6191S**	1
09	Double Lock Connect, fuel feed			**A120W6757F**	1
10	Clip Pipe			**A128W6831F**	1
11	Location Plate, injector		2ZR	**A120E0164F**	1
12	Adadptor, injector		2ZR	**A120E0124F**	4
13	Washer flat M8 x 20 x 2.5		2ZR	**A079W4019F**	2

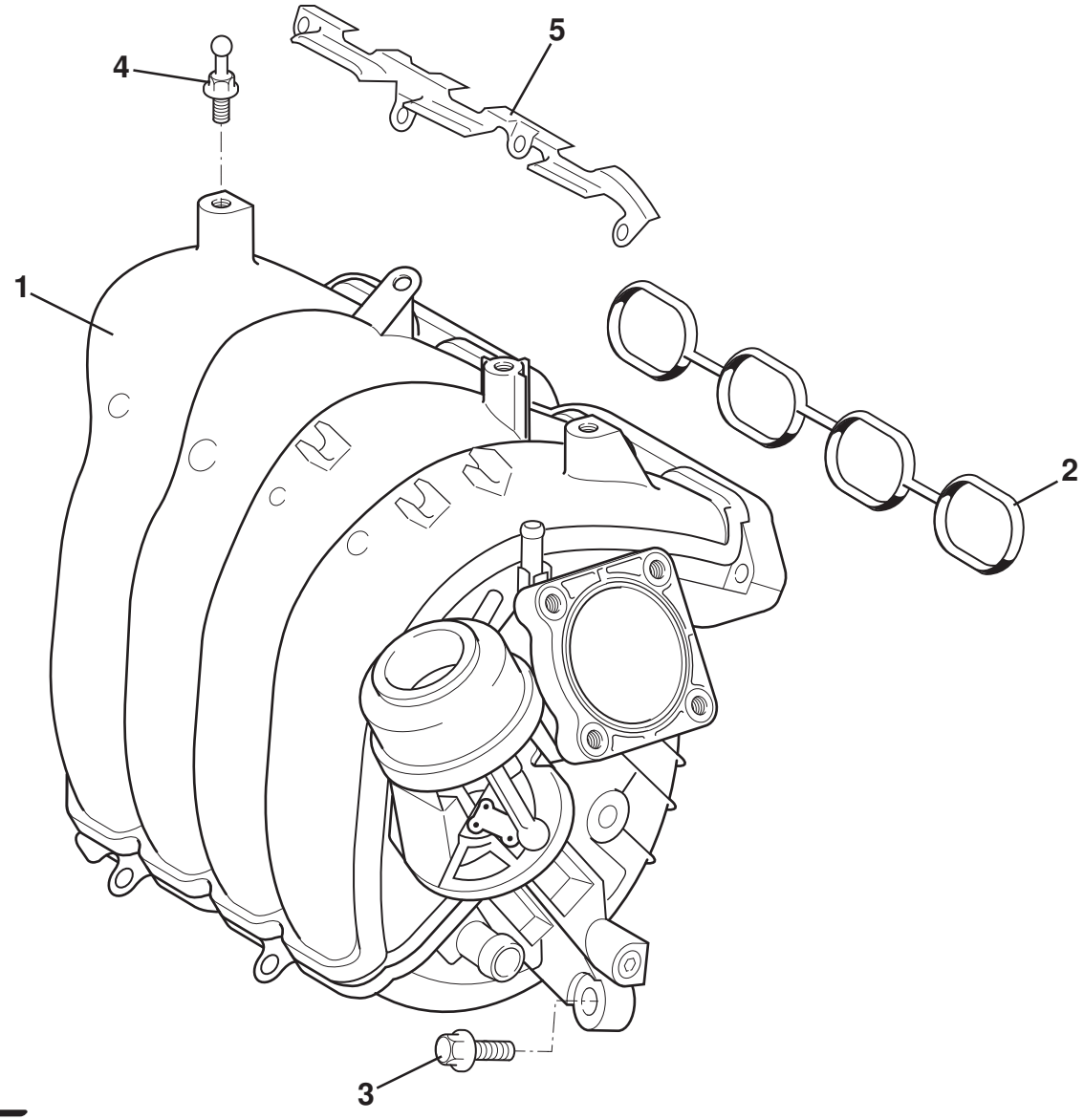

ELISE

42.07e

Function Code 42.07e Inlet Manifold, Plenum & gaskets, Elise 2011 MY, 1ZR

Dep	Part Description	Remarks	Option	Part Number	Qty
01	Inlet Manifold			**A120E7184S**	1
02	Gasket, inlet manifold			**A120E7190S**	1
03	Bolt, hex. flg., hd., manifold to head			**A120E7238S**	5
04	Bolt, special, cover retention			**A120E7232S**	2
05	Spreader Plate, manifold to head			**A120E7185S**	1

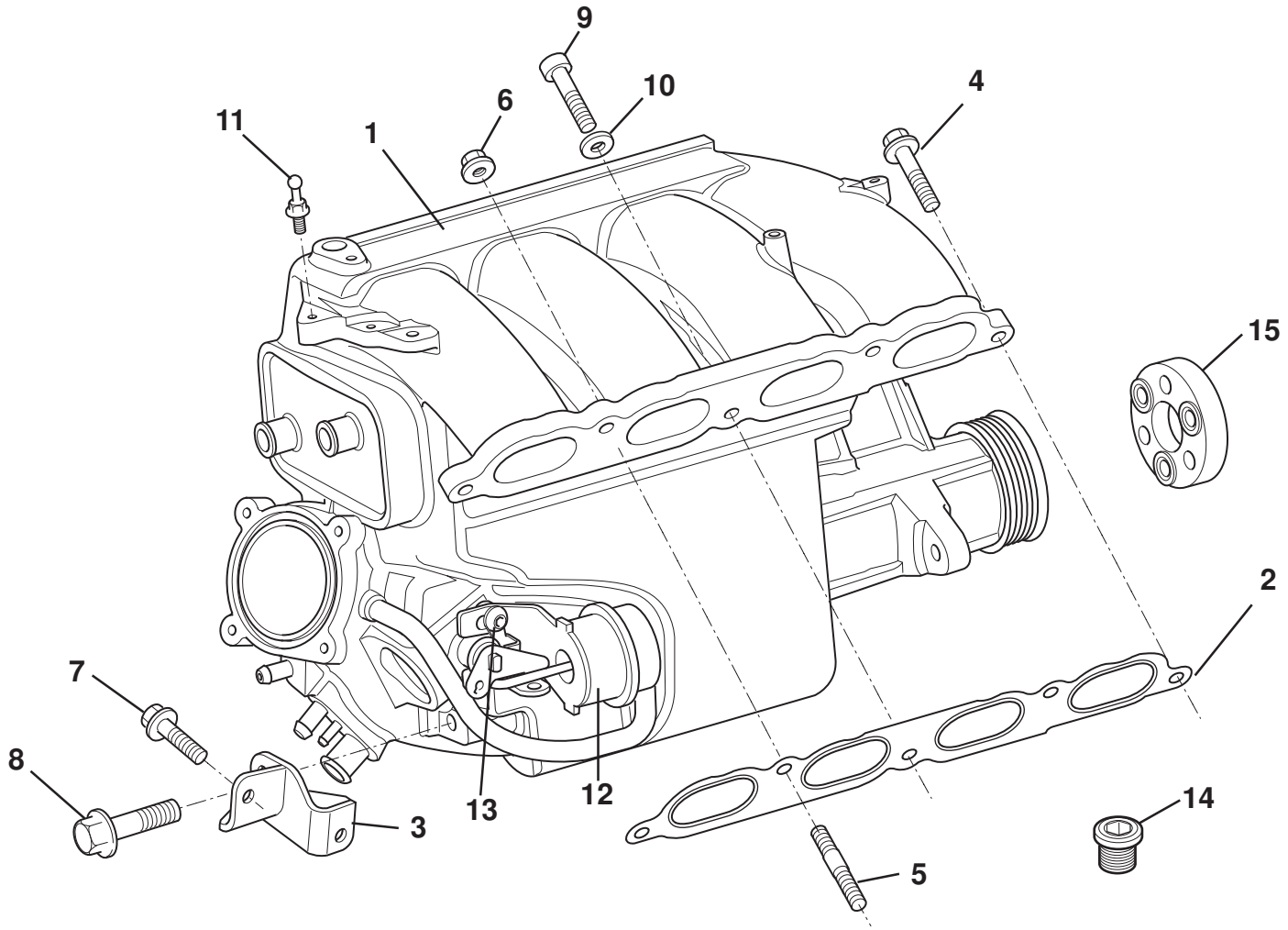

ELISE

42.10

Updated 1st May 2018

Function Code 42.10 Supercharger Intercooler

Dep	Part Description	Remarks	Option	Part Number	Qty
01	Supercharger Assembly			**B120E0135H**	1
02	Manifold Gasket			**A120E0143F**	1
03	Rear Support Bracket, supercharger			**C120E0154F**	1
04	Bolt M8 x 30, hex. flg. Hd.			**A116W5245F**	2
05	Stud M8			**A120E6619S**	2
06	Nut, flange, M8			**A111W3154F**	2
07	Bolt M8 x 25, hex. flg. Hd.			**A132W5006F**	2
08	Bolt M10 x 25, hex. flg. Hd.			**A132W5008F**	1
09	Screw M8 x 30, cap hd, supercharger to cylinder head	Centre fixing		**A117W7215F**	1
10	Washer M8, supercharger to cylinder head			**A111W4175F**	1
11	Bolt, special, cover retention			**A120E7232S**	2
12	Bypass Actuator Valve, vacuum			**A120E6513S**	1
13	Bolt, button hd., bypass actuator retention			**A128E6019S**	1
14	Plug, oil filler			**A128E6015S**	1
15	Moly-gard Coupler, nose to supercharger			**A128E6016S**	1
16	Oil Fill Kit	Not illustrated includes oil & plug		**A128E6014S**	1

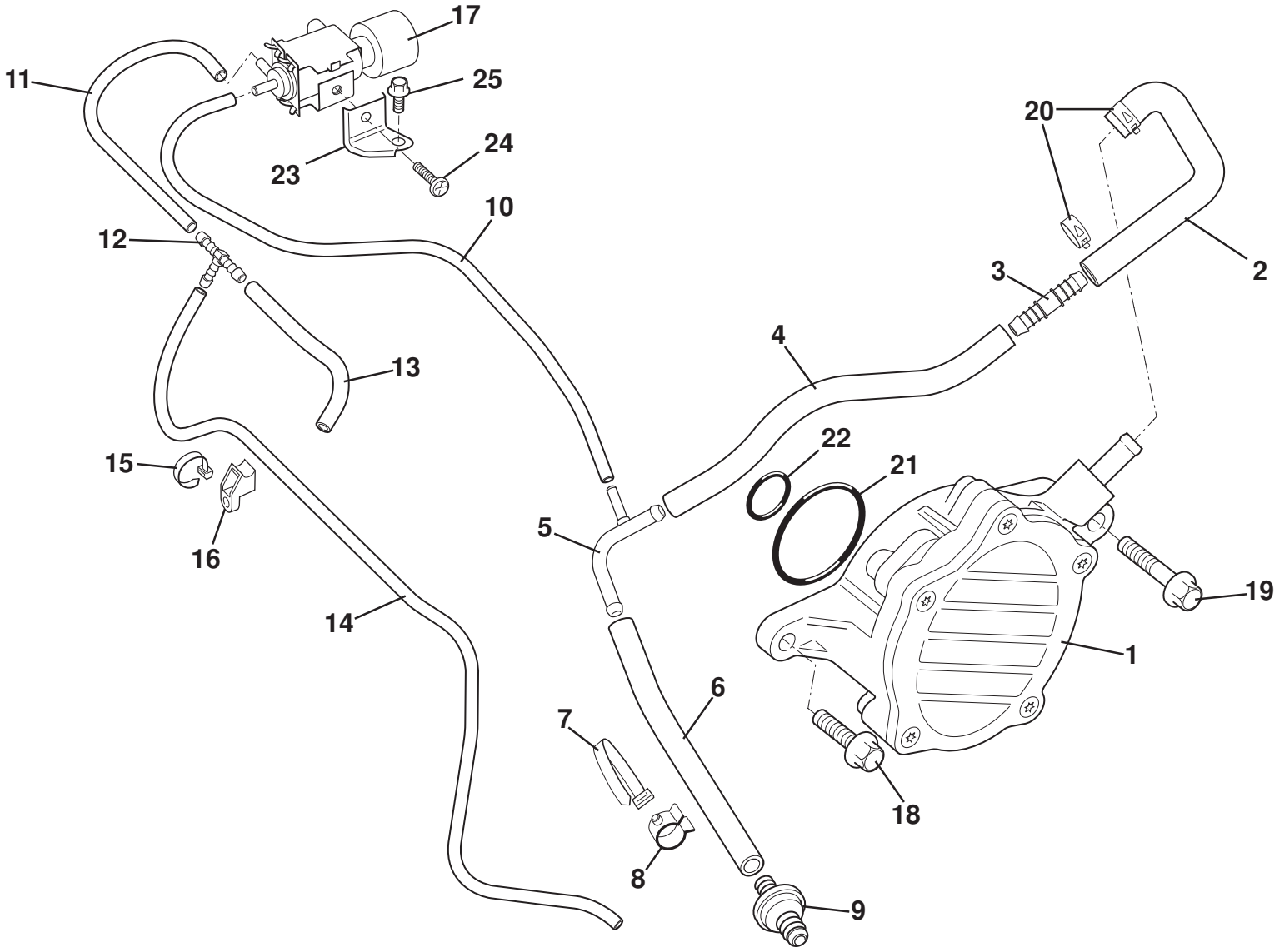

ELISE

43.03

Function Code 43.03 Vacuum System, Hoses, Pipes & Fittings

Dep	Part Description	Remarks	Option	Part Number	Qty
01	Pump	Incl. 'O' rings		**A120E7221S**	1
02	Hose, vacuum pump inlet			**A120E6623S**	1
03	Connector, 10mm to 6mm			**A120E6565F**	1
04	Hose, connector to 'T' connector	Cut to length		**A131J0001F**	225mm
05	Tee Connector, vacuum hoses			**B120E0099F**	1
06	Hose, 'T' connector to check valve	Cut to length		**A131J0001F**	195mm
07	Cable Tie, swivel			**A082W6324F**	1
08	Swivel Clip, cable tie			**A120E6566F**	1
09	Check Valve, brake booster hose			**A131J0001F**	1
10	Hose, 'T' connector to solenoid valve	Cut to length		**A116M0040F**	470mm
11	Hose, solenoid valve to 'T' connector	Cut to length		**A120E7285S**	1
12	Tee Connector, 5mm			**A111M6045F**	1
13	Hose, 'T' connector to manifold	Cut to length		**A120E7285S**	100mm
14	Hose, 'T' connector to airbox	Cut to length		**A116M0040F**	650mm
15	Cable Tie			**A075W6038F**	1
16	Cradle, cable tie			**A082W6276F**	1
17	Solenoid Valve			**A120E7262S**	1
18	Bolt, hex. flg. hd., short, pump to head			**A132E6468S**	1
19	Bolt, hex. flg. hd., long, pump to head			**A120E7280S**	2
20	Hose Clamp, inlet hose retention			**A120E7255S**	2
21	'O' Ring, large, pump to head			**A120E7295S**	1

Function Code 43.03 Vacuum System, Hoses, Pipes & Fittings

Dep	Part Description	Remarks	Option	Part Number	Qty
22	'O' Ring, small, pump to head			**A120E7294S**	1
23	Bracket, valve mounting			**A120E7206S**	1
24	Hose, vacuum, valve to manifold			**A132E6471S**	1
25	Screw, button hd., valve to bracket			**A120E7284S**	1

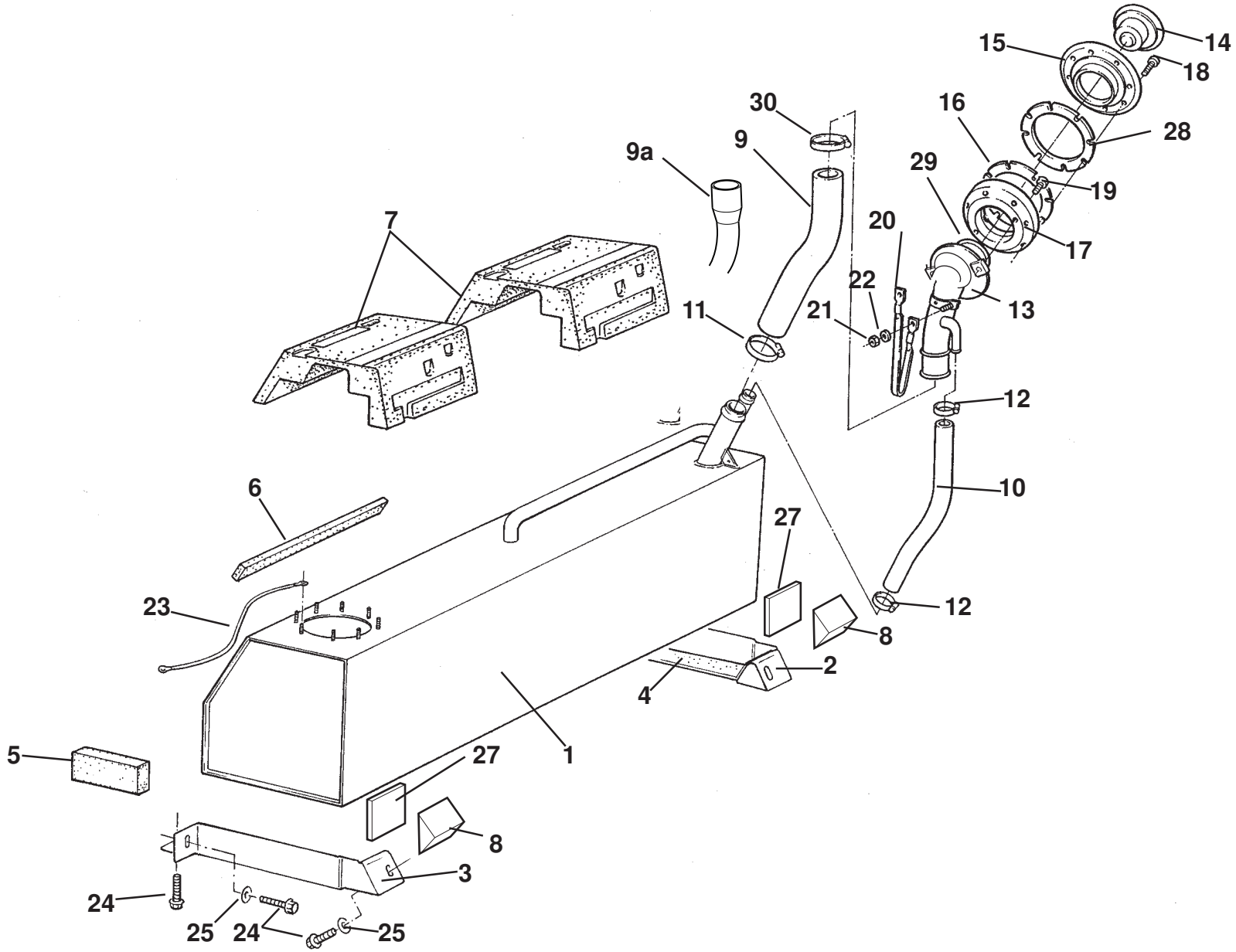

ELISE

44.01

Updated 5th February 2018

Function Code 44.01 Fuel Tanks, Filler

Dep	Part Description	Remarks	Option	Part Number	Qty
01	Fuel Tank, Dia 45mm filler pipe**	If unavailable order 01a,09a and 11a		**B120L0004H**	1
01a	Fuel Tank, Dia 33mm filler pipe***			**C120L0004H**	1
02	Bracket, fuel tank support, RH			**B120L0040F**	1
03	Bracket, fuel tank support, LH			**B120L0041F**	1
04	Isolating Strip, tank brackets			**A120L0047F**	2
05	Foam Support, tank sides			**B120L0028F**	4
06	Restraint Foam			**A120L0053F**	4
07	Foam Block, fuel tank retention, upper			**B120L0044F**	2
08	Rear Restraint, tank mounting			**A120L0045F**	2
09	Hose, fuel filler**	Dia 45mm tank hose to connection		**A117L0060F**	1
09a	Hose, fuel filler***	Dia 33mm tank hose to connection		**B138L0112F**	1
10	Hose, fuel breather			**B117L0062F**	1
11	Hose Clip, filler hose**	For item 09 lower connection		**A120L6016F**	1
11a	Hose Clip, filler hose***	For item 09a lower connection		**A120W6784F**	1
12	Hose Clip, breather hose			**A079K6018F**	2
13	Fuel Filler Neck			**B120L0048F**	1

Function Code 44.01 Fuel Tanks, Filler

Dep	Part Description	Remarks	Option	Part Number	Qty
14	Fuel Cap, including lock barrel & Keys, black body	Master keys with handle, Keys are L-code*		**C117L0025J**	1
14a	Fuel Cap, less lock barrel, black body	Cap only, order with vehicle lock set, or item 14b		**A138L0163F**	1
14b	Lock Barrel & Keys, for the fuel cap	Master keys with handle, Keys are L-code*		**A117L6050S**	1
15	Finisher Ring, cap to clamshell			**B117L0024F**	1
15a	Finisher Ring, cap to clamshell, black		Optional	**A138L0159S**	1
16	Gasket, spacer ring to clamshell			**A117L0027F**	1
17	Spacer Ring, filler to clamshell	Includes gasket item 16		**A117L0067F**	1
18	Screw, M5 x 15, skt, cap hd., filler neck to clamshell			**A117L6033F**	8
18a	Screw, M5 x 25 csk skt hd S/S, black		Optional	**A128W5004F**	8
19	Screw, M5 x 10, skt. cap hd., S/S, ring to filler neck			**A117L6032F**	2
20	Earth Braid, filler neck			**A079M4094F**	1
21	Nyloc Nut, M5, braid to filler neck			**A075W3008Z**	2
22	Washer, flat, M5 x 10 x 0.8, S/S, braid to filler neck			**A075W1039Z**	2
23	Earth Lead, fuel tank			**A120M0030H**	1
24	Screw, M8 x 20, hex. flg. hd., brackets to chassis			**A132W5005F**	6
25	Washer, flat, M8 x 20 x 2.5, brackets to chassis			**A079W4019F**	4
26	Foam Pad, tank bay aperture	Bonded to access panel		**A120L0056F**	1
27	Support Pad, fuel tank front			**B120L0058F**	1
28	Gasket, finisher ring to clamshell			**B117L0026F**	1

Function Code 44.01 Fuel Tanks, Filler

Dep	Part Description	Remarks	Option	Part Number	Qty
29	'O' Ring, finisher ring			**A117L6005F**	1
30	Hose Clip, filler hose			**A120L6016F**	1
		*NOTE: For information on D & L code keys see LSL483g			
		**1ZR up to HH_11267 / 2ZR up to HH_11110+11178+11180			
		***2ZR from HH_11112 expcept for see **			

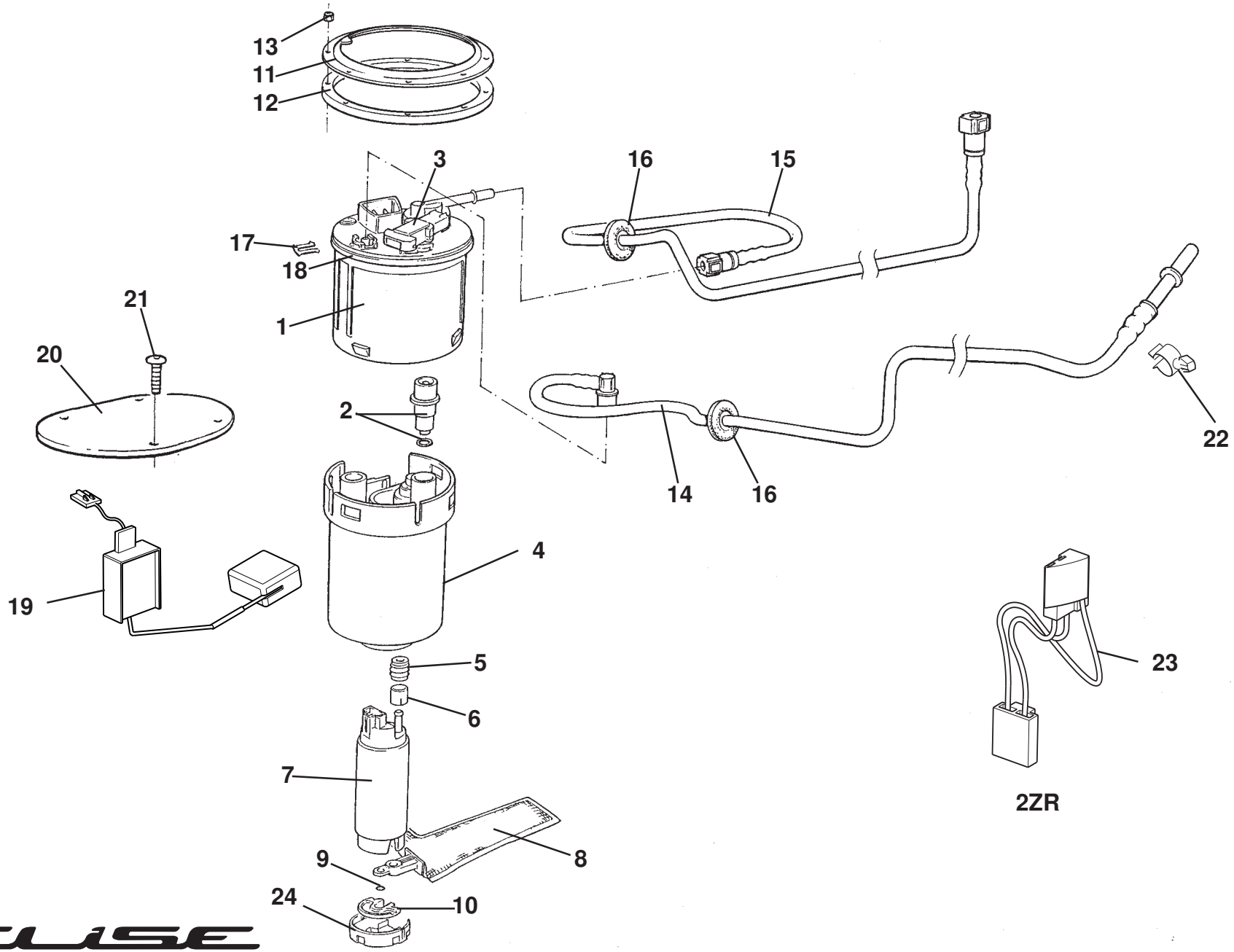

ELISE

44.03

Updated 2nd May 2017

Function Code 44.03 Fuel Pump; Filter, Pipes

Dep	Part Description	Remarks	Option	Part Number	Qty
01	Pipe Plate Assembly			**A120L6008S**	1
02	Fuel Pressure Regulator	Includes 'O' ring		**A120E6413S**	1
02a	Fuel Pressure Regulator		2ZR	**B120L0073K**	1
03	Sensor, vapour pressure			**A120L6014S**	1
04	Filter, tank			**A120L6007S**	1
05	Seal, pump to filter			**A120L6005S**	1
06	Spacer, seal to filter			**A120L6004S**	1
07	Fuel Pump			**A120L6002S**	1
07a	Fuel Pump, high flow	Discard filter supplied, order items 08 & 09	2ZR	**A120L6027H**	1
08	Filter, suction, pump			**A120L6001S**	1
09	Clip, filter to pump			**A120L6003S**	1
10	Rubber Cushion, pump assy. Supporting			**A120L6006S**	1
11	Clamp Ring, fuel pump			**A120L0013H**	1
12	Spacer Ring, fuel pump			**A121L0031H**	1
13	Nyloc Nut, M6, pump to tank			**A120L0014H**	8
14	Pipe, fuel feed, 2ZZ, 1ZR, 2ZR			**A128L0019F**	1
15	Pipe, R/O valve quick-connect to tank		Euro cars	**A120L0043F**	1
16	Grommet, pipes through tank bay			**A117L6027H**	2
17	Clip, pipe retaining	Also sensor retaining		**A120L6012S**	2
18	Gasket, pump to tank			**A120L6009S**	1

Function Code 44.03 Fuel Pump; Filter, Pipes

Dep	Part Description	Remarks	Option	Part Number	Qty
18a	Gasket, pump to tank, LEV 2			**A121L0076F**	1
19	Sender Unit, fuel level			**A120L0020S**	1
20	Access Panel, fuel pump connections			**A120L0046F**	1
20a	Mounting Bracket, resistor	See 17.03	2ZR		1
21	Screw, panel to chassis			**A111W7117F**	4
22	Clip Pipe			**A128W6831F**	3
23	Harness Fuel Pump			**A120L0076H**	1
24	Cap, fuel pump module base			**A120L6010S**	1

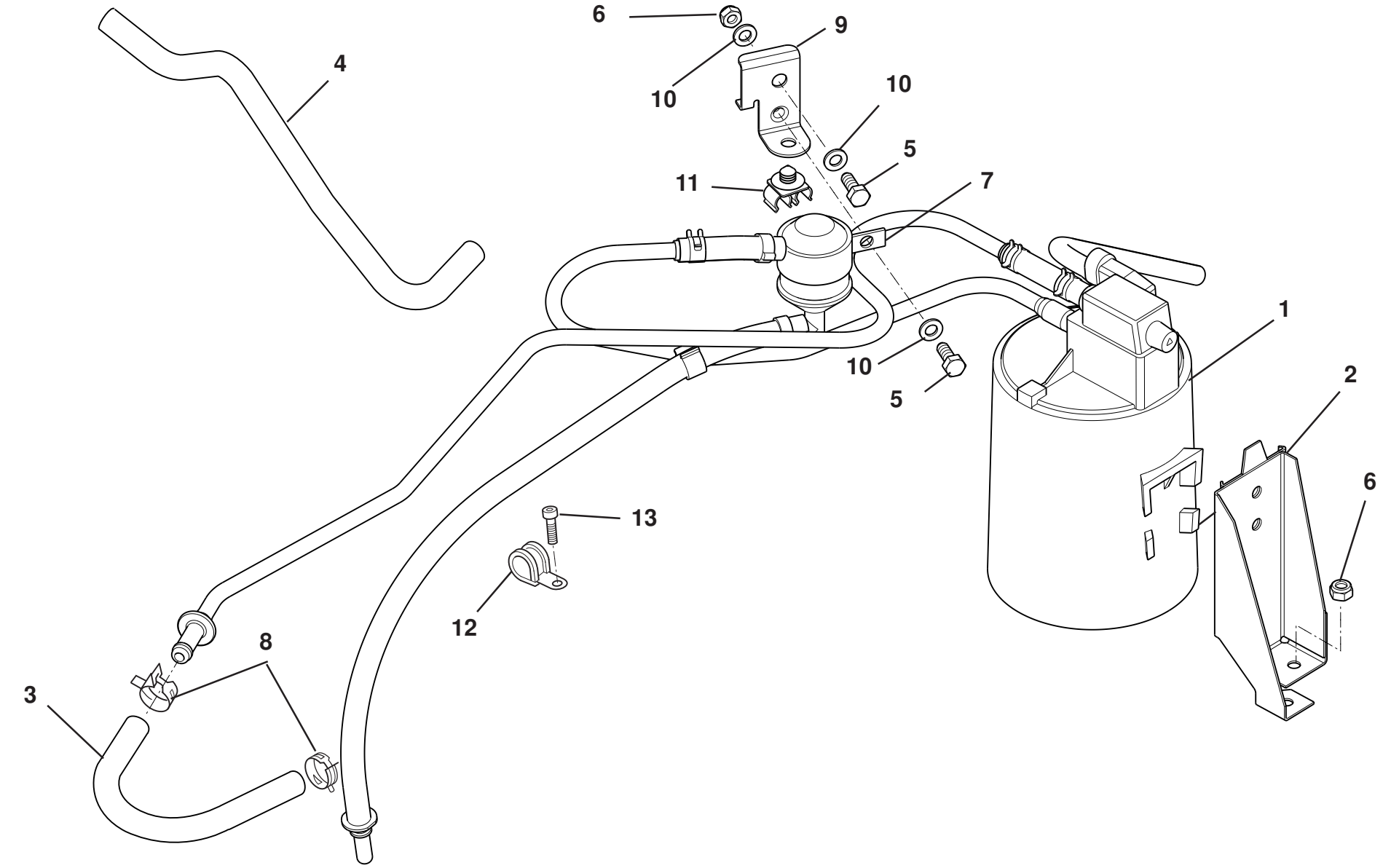

ELISE

44.05

Updated 2nd May 2017

Function Code 44.05 Charcoal Canister & Evaporative Loss System.

Dep	Part Description	Remarks	Option	Part Number	Qty
01a	Charcoal Canister Assembly	Includes pipes, roll-over valve	1ZR	**A128L0001F**	1
01b	Charcoal Canister Assembly	Includes pipes, roll-over valve	2ZR	**A120L0069F**	1
02	Bracket, canister mounting			**A128L0006F**	1
03	Hose, fuel vapour feed		1ZR	**A120E6366S**	1
04	Hose Fuel Vapour Feed		2ZR	**A120L0075F**	1
05	Bolt M6 x 16, bracket to backstay			**A075W1028Z**	2
06	Nut Nyloc M6, bracket to backstay			**A907E6285F**	3
07	Clamp, roll-over valve			**A120L0052F**	1
08	Hose Clip, fuel vapour hose to manifold			**A116K6017F**	2
09	Bracket, anti-rotation, roll over valve			**A120L0059F**	1
10	Washer M6 x 12.1 x 1.4			**A075W4013Z**	3
11	Clip, fuel pipe,			**A116W6727F**	1
12	'P' Clip, evap. Pipe			**A111W6595F**	2
13	Bolt M6 x 10, cilp evap pipe			**A111W7151F**	2

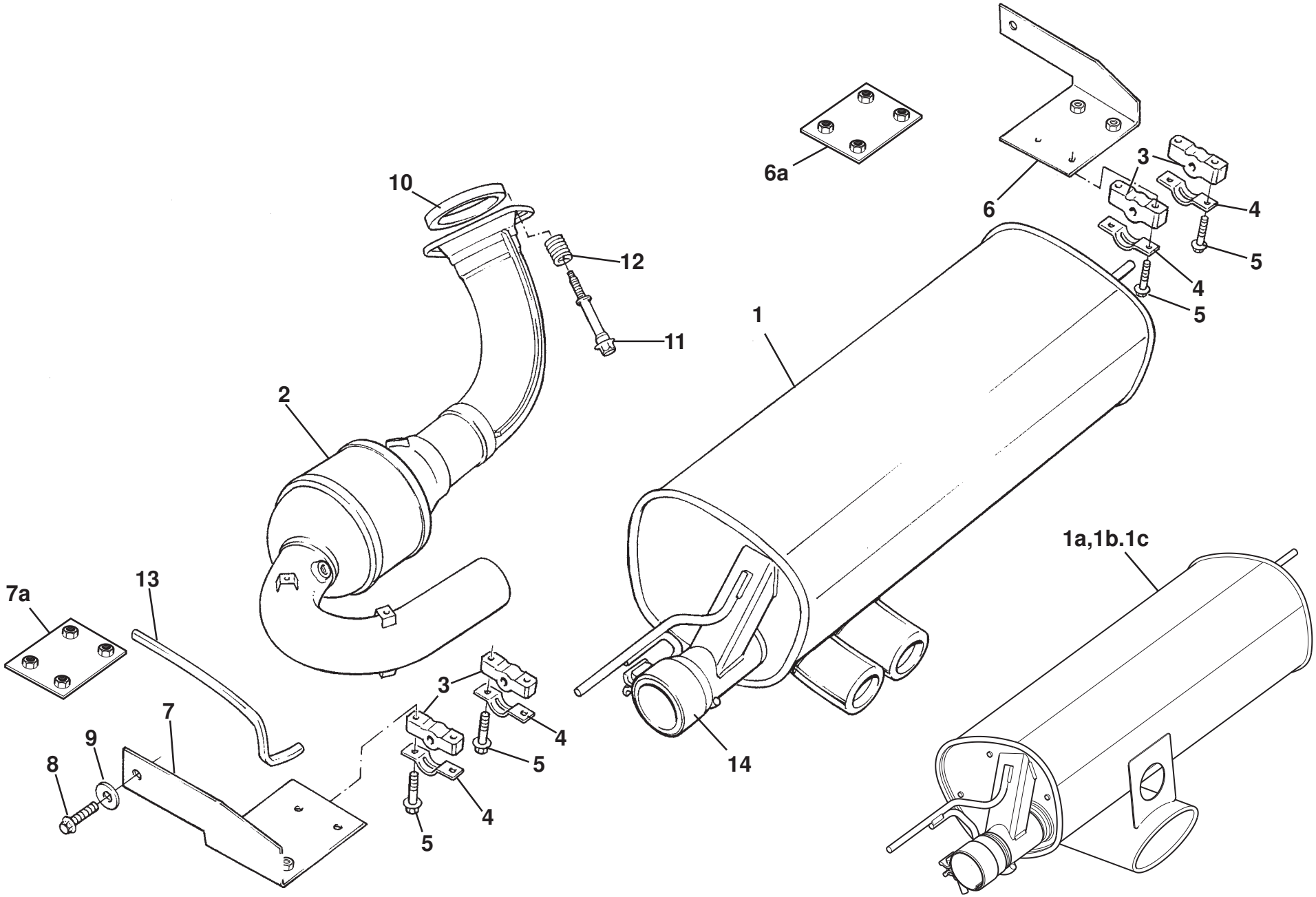

ELISE

45.01

Updated 3rd April 2017

ELISE 2ZR	B128S0002F SILENCER	A704S0002F SILENCER	A704S0001F SILENCER	147S0001F SILENCER	A147S0002F SILENCER TITAINIUM
CUP 260	X	X	X	S	O
CUP 250 17.5MY ON	X	X	X	S	O
SPORT & SPRINT 220 17.5MY ON	X	X	X	S	O
CUP 250 & 250 50th UP TO 17.5MY	X	X	S	X	R*
CUP S & 220	X	X	S	X	R*
CUP R FROM EH-11072	X	X	S	X	R*
CUP R UP TO EH-11072	X	S	X	X	R*
S & SPORT 220 UP TO 17.5MY	S	X	X	X	R

S =STANDARD FIT
O=OPTION FIT
X= NOT FITTED
R=RETROFITABLE*Check rear diffuser prior to Vin HH_11295

LSL672

Updated 4th June 2018

Service Parts List ELISE

Function Code 45.01 Exhaust System

Dep	Part Description	Remarks	Option	Part Number	Qty
01	Silencer Assembly, 1ZR	Includes clamp		**A131S0001F**	1
01a	Silencer Assembly, 2ZR	Includes clamp, single oval tailpipe	Up to 17.5MY	**B128S0002F**	1
01b	Silencer Assembly, 2ZR	Includes clamp, single oval tailpipe	From 17.5MY	**A147S0001F**	1
01c	Silencer Assembly, 2ZR, titainium	Includes clamp, single oval tailpipe	From 17.5MY	**A147S0002F**	1
02	Catalyst/Downpipe Assembly, 1ZR, 2ZR			**A120S0036F**	1
03	Exhaust Mounting, silicon, exhaust to subframe			**A111S0071F**	4
04	Clip, exhaust hanger			**A117S0049F**	4
05	Bolt, M6 x 35, flg. hex hd.			**A116W2191F**	8
06	Bracket, silencer to subframe, RH	Two hole exhaust mounting on rear subframe		**A120A0110F**	1
06a	Nutplate, silencer to subframe	Rear subfames with 4 hole exhaust mounting		**A120A0184F**	1
07	Bracket, silencer to subframe, LH	Two hole exhaust mounting on rear subframe		**A120A0111F**	1
07a	Nutplate, silencer to subframe	Rear subfames with 4 hole exhaust mounting		**A120A0184F**	1
08	Screw, M6 x 12, flg. hd., bracket to subframe			**A111E6007F**	2
09	Washer, flat, M6 x 25, bracket to subframe			**B075W4017Z**	2
10	Gasket, downpipe to manifold, 1ZR, 2ZR			**A120E6549F**	1

Function Code 45.01 Exhaust System

Dep	Part Description	Remarks	Option	Part Number	Qty
11	Bolt, flg. hex. hd., downpipe to manifold			**A120E6409S**	2
12	Spring, downpipe to manifold			**A120E6408S**	2
13	Edge Finisher, bracket/subframe			**AX75L6020V**	300mm
14	Torca Clamp, silencer to downpipe	Refer to TSB 2008/07		**A120S6000S**	1
		* Replacement rear subframes now have 4 holes for exhaust mounting now have 4 holes for exhaust mounting			

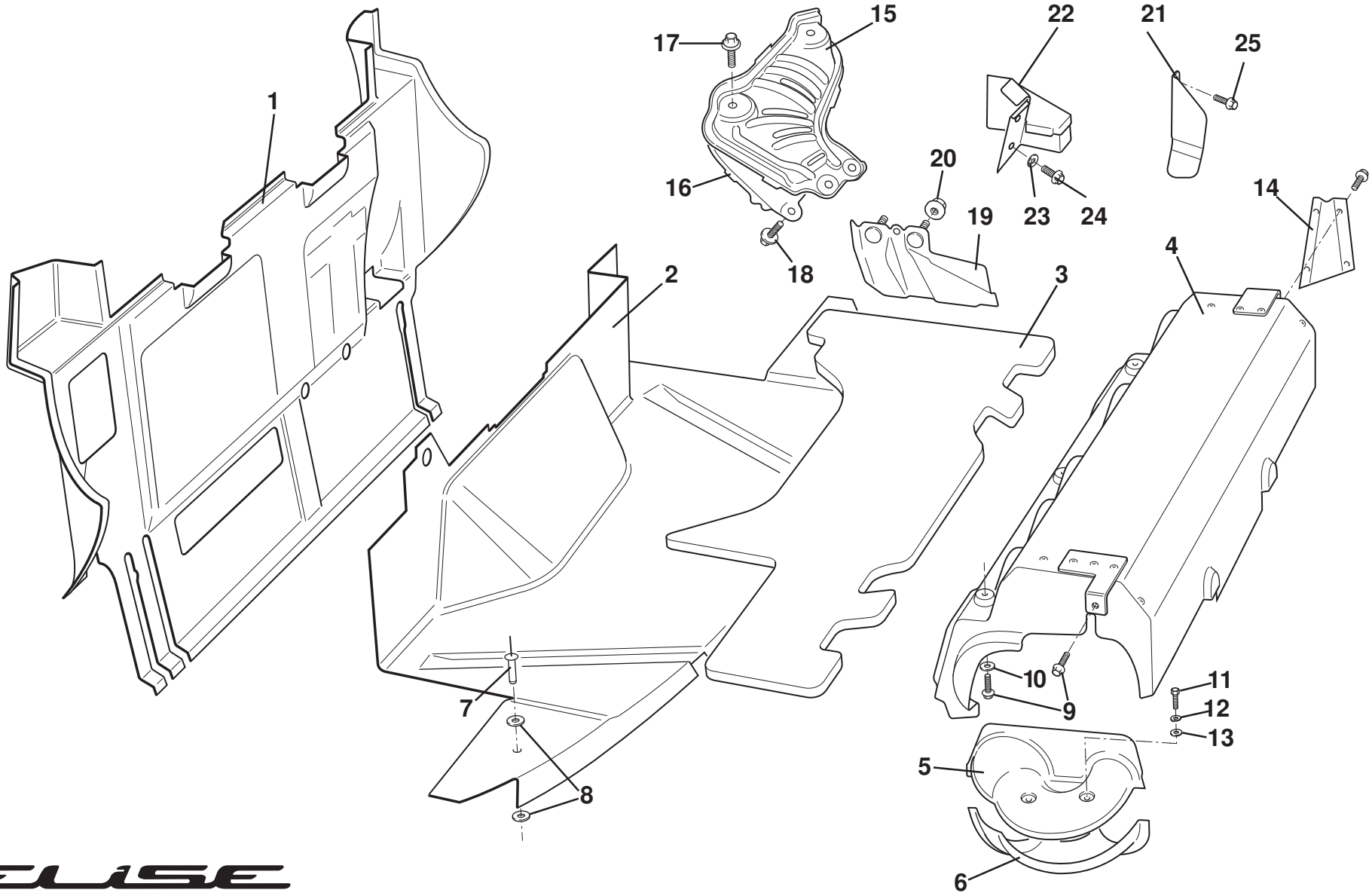

ELISE

45.05b

Function Code 45.05b Heatshields, Elise 2011 MY, 1ZR, 2ZR

Dep	Part Description	Remarks	Option	Part Number	Qty
01	Heatshield, bulkhead			**A120B0138F**	1
02	Heatshield, bootbox			**A120B0269F**	1
03	Heatshield, boot floor insulation			**A120B0361F**	1
04	Heatshield Assembly, muffler			**A120S0039J**	1
04a	Heatshield Assembly, muffler, TCA brace	For double shear TCA brace	Optional	**A120S0038F**	1
05	Heatshield, muffler 'U' bend upper			**D120S0029F**	1
06	Heatshield, muffler 'U' bend lower			**D120S0030F**	1
07	Pop Rivet, blind, bootbox heatshield fixing			**A111W6614F**	5
08	Washer, flat, M5 x 25, black, bootbox heatshield fixng			**A082W4098F**	10
09	Screw, M6, hex. flg. hd., muffler heatshield fixing			**A111E6007F**	6
10	Washer, flat, M6 x 25, muffler heatshield fixing			**B075W4017Z**	3
11	Screw, M6 x 10, hex. hd., heatshield to 'U' bend			**A075W1026Z**	4
12	Washer, spring, M6, heatshield to 'U' bend			**A075W4035Z**	4
13	Washer, flat, M6 x 25, heatshield to 'U' bend			**B075W4017Z**	4
14	Heatshield Closure Plate, RH	Part of item 4		**B120S0028H**	1
15	Heatshield, exhaust manifold, upper			**A120S7187S**	1
16	Heatshield, exhaust manifold, lower			**A120S7188S**	1
17	Bolt, hex. flg. hd., with washer, upper shield to manifold			**A132E6468S**	4
18	Bolt, hex. flg. hd., with washer, lower shield to manifold			**A132E6424S**	3
19	Heatshield, CV joint			**A120F7163S**	1
20	Nut, flange, heatshield to stay	For stay see 40.21		**A120F7175S**	2

Function Code 45.05b Heatshields, Elise 2011 MY, 1ZR, 2ZR

Dep	Part Description	Remarks	Option	Part Number	Qty
21	Heatshield, sensor		2ZR	**A120E0175F**	1
22	Heatshield, rear engine mount			**B120S0010F**	1
23	Screw, M6 x 12, hex. flg. hd., eng. mount heatshield fixing			**A111E6007F**	2
24	Washer, flat, M6 x 25, engine mount heatshield fixing			**A075W4017Z**	2
25	Screw, M6 x 12, hex. flg. hd. heatshield, sensor			**A132W5010F**	2

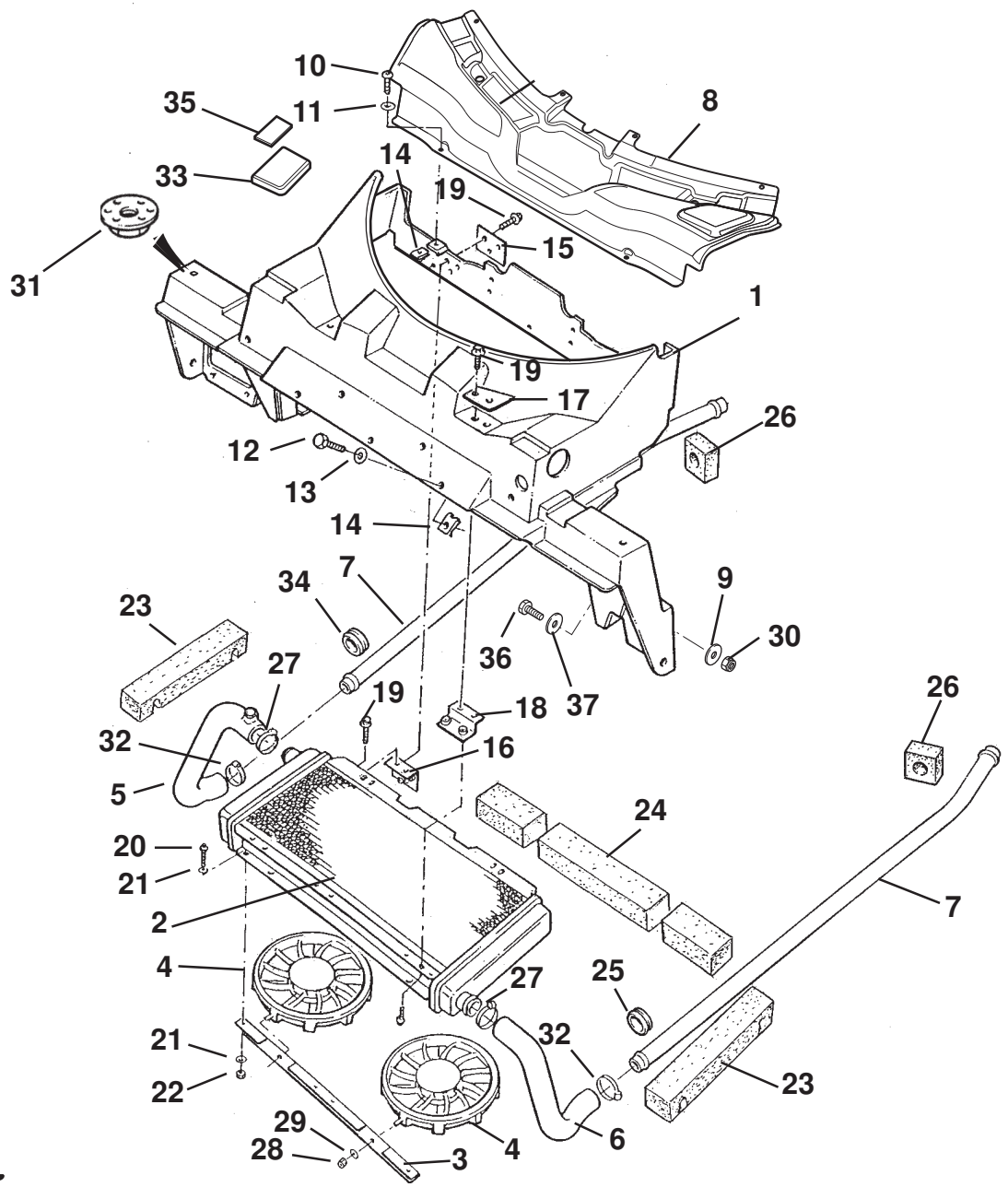
10
35
11
8
33
14
19
15
31
1
19
17
26
12
13
14
34
7
9
23
27
36
37
30
19
18
26
32
16
5
24
20
21
2
7
4
27
25
21
32
22
23
29
28
3
4
6

ELISE

46.01

Service Parts List ELISE

Function Code 46.01 Engine Cooling System & Fan

Dep	Part Description	Remarks	Option	Part Number	Qty
01	Radiator Housing	Also order item 33		**C120B0290F**	1
02	Radiator			**C117K0021F**	1
03	Bracket, fans to radiator, heater only	For AC cars fans mount to condenser brackets see 18.03		**A117K0025F**	2
04	Radiator Cooling Fan			**A111M6070F**	2
05	Hose, pipe to radiator, RH	Includes bleed valve		**A117K0008F**	1
06	Hose, pipe to radiator, LH			**A117K0015F**	1
07	Pipe, chassis water rail			**A116K0018F**	2
08	Shroud, radiator, one piece			**C120B0250F**	1
09	Washer Flat, M6 x 18 x 1, surround to crash structure			**B082W4018F**	2
10	Screw, M5 x 16, skt. button hd., shroud to housing			**A111W7156F**	2
11	Washer, flat, M5 x 19 x 1.4, s/s, black, shroud to housing			**A082W4107F**	2
12	Screw, M5 x 20, skt. button hd., hsg. to crash structure			**A082W7173F**	6
13	Washer, flat, M5, housing to crash structure			**A340W4183F**	6
14	Spirenut, M5, shroud to housing/housing to crash structure			**A117W6697F**	8
15	Spreader Plate, rear bracket to housing			**A117P0117F**	2
16	Bracket, radiator to housing rear			**A117K0006F**	2
17	Spreader Plate, front bracket to housing			**A117P0102F**	2
18	Bracket, radiator to housing front			**A117K0005F**	2

Function Code 46.01 Engine Cooling System & Fan

Dep	Part Description	Remarks	Option	Part Number	Qty
19	Bolt, M8 x 16, flg. hd.,brackets to radiator/housing			**A117W2202F**	18
20	Screw, M6 x 16, hex. hd., bracket to radiator			**A075W1028Z**	8
21	Washer, flat, M6 x 12, bracket to radiator			**A075W4013Z**	16
22	Nyloc Nut, M6			**A075W3009Z**	8
23	Foam, condenser to housing sides	RH remove pre-cut slots	AC cars	**C117B0282F**	2
24	Foam, condenser to housing rear edge	Three sections		**A117B0446F**	1
25	Grommet, pipe through chassis front, LH			**A111K6006F**	1
26	Seal, pipe to chassis			**A111A0033F**	4
27	Hose Clip, hose to radiator			**A120W6892F**	2
28	Nyloc Nut, M5, fan to bracket			**A075W3008Z**	4
29	Washer, flat, M5 x 18 x 1.4, fan to bracket			**B075W4009Z**	4
30	Nyloc Nu,t M6, surround to crash structure			**A075W3009Z**	2
31	Captive Nut, M8, big hd., housing to clamshell	Bonded to housing		**A111W6592F**	2
32	Hose Clip, hose to chassis pipes			**A075M6145F**	2
33	Cap, radiator housing	Bonded to cut-down towers		**A120B0396F**	2
34	Grommet, pipe through chassis front, RH			**A082L6159Z**	1
35	Pad, front clamshell mounting to rad. Housing			**A117U0163F**	2
36	Screw M6 x 25 hex hd, surround to crash structure			**A075W1031Z**	2
37	Washer Flat, 3/16 x 3/4 s/s, surround to crash structure			**B075W4009Z**	2

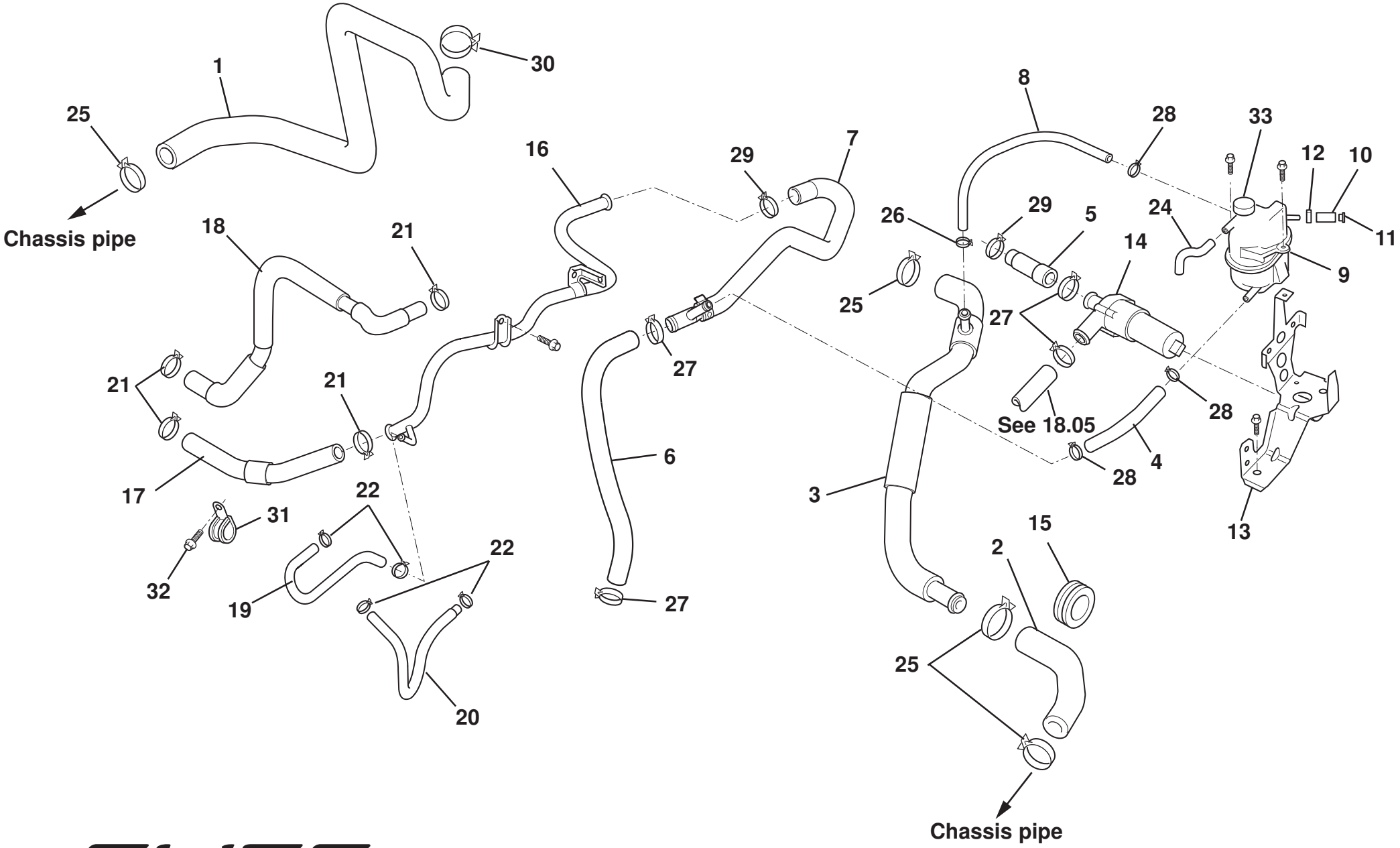

ELISE

46.01d

Updated 3rd July 2017

Function Code 46.01d Engine Cooling System Elise 2011 MY 1ZR, 2ZR

Dep	Part Description	Remarks	Option	Part Number	Qty
01	Hose, engine inlet		1ZR	**A120K0033F**	1
01a	Hose, engine inlet		2ZR	**A120K0055F**	1
02	Hose, outlet to chassis pipe			**B116K0016F**	1
03	Hose, engine outlet			**A120K0034F**	1
04	Hose, header tank to water pump			**A120K0036F**	1
05	Hose, engine to re-circ pump			**A120K0031F**	1
06	Hose, heater return lower, pipe to engine			**A120K0039F**	1
07	Hose, heater return upper, pipe to engine			**A120K0032F**	1
08	Hose degas			**A120K0037F**	1
09	Header Tank Assembly	Includes item 24		**A120K6005S**	1
10	Hose, blanking header tank			**A120K0041F**	1
11	Plug, blanking header tank			**A120K0042F**	1
12	Clamp, hose			**A120W6738F**	1
13	Bracket, header tank mounting			**A120K0030F**	1
14	Recirculation Pump			**A117K0013F**	1
15	Grommet, hose through chassis rear			**A082K6022F**	2
16	Pipe, water bypass No.1			**A120E7174S**	1
17	Hose, water bypass No.3			**A120E7173S**	1

Function Code 46.01d Engine Cooling System Elise 2011 MY 1ZR, 2ZR

Dep	Part Description	Remarks	Option	Part Number	Qty
18	Hose, water inlet			**A120E7171S**	1
19	Hose, water bypass No.2		1ZR	**A120E7172S**	1
19a	Hose Water Bypass, throttle heater pipe No. 2		2ZR	**A120E6578H**	1
20	Hose, water bypass No.1		1ZR	**A120E7170S**	1
20a	Hose Water Bypass, throttle heater pipe, No. 1		2ZR	**A120E0180S**	1
21	Clamp, hose water bypass			**A120E7287S**	4
22	Clamp, hose water bypass			**A132E6271S**	4
23	Bolt, bypass pipe to engine			**A132E6191S**	2
24	Hose, header tank overflow	Part of item 08		**Not Available**	1
25	Hose Clamp, 40mm, hose to pipe rear			**A116K6015F**	4
26	Hose Clamp, 15.7mm, hose to hose			**A120W6738F**	1
27	Hose Clamp, 27mm, hose to pump			**A116K6016F**	4
28	Hose Clamp, 17.7mm, hose to header tank			**A120W6739F**	3
29	Hose Clamp, DN242822, hose to engine			**A131W6840F**	2
30	Hose Clamp, norma SGT30-45, hose to engine			**A120W6784F**	1
31	'P' Clip, bypass hose			**A120W6903F**	1
32	Screw M6x 25 hex flg. bypass hose			**A132W5014F**	1
33	Cap, header tank			**A120E6341S**	1

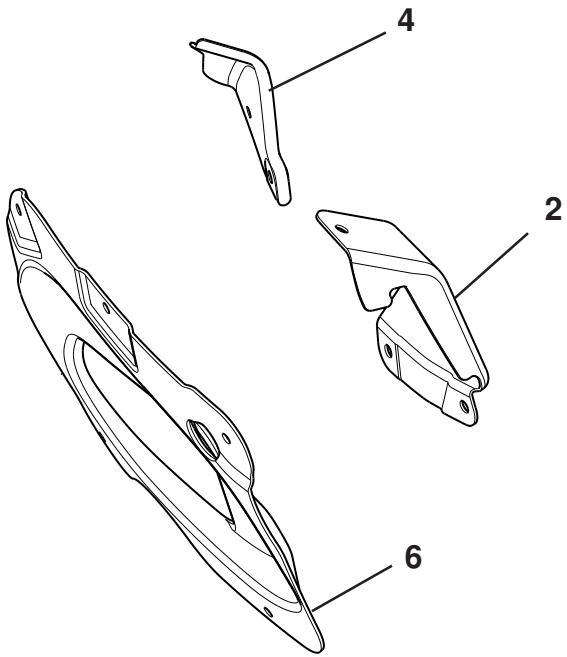

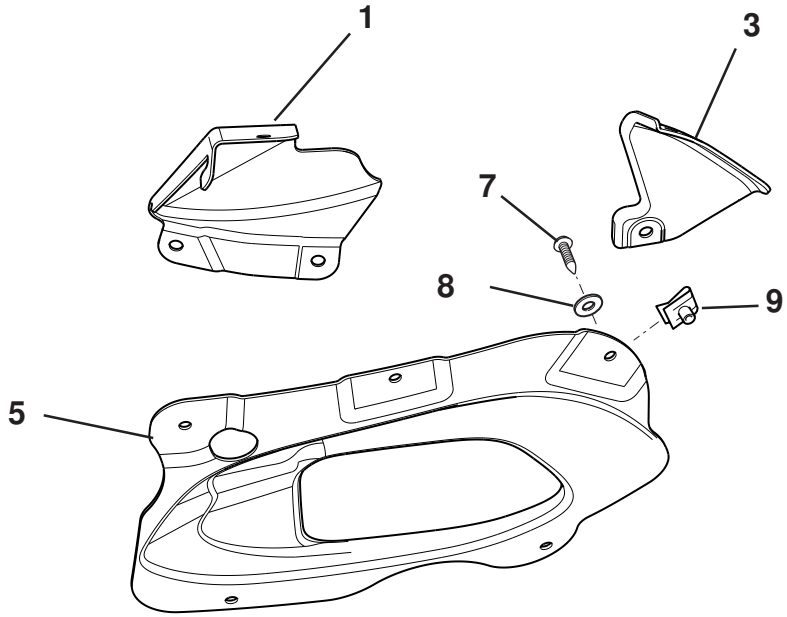

ELISE

46.04

Updated 3rd April 2017

Function Code 46.04 Front Ducts

Dep	Part Description	Remarks	Option	Part Number	Qty
01	Deflector Oil Cooler Duct LH			**A120B4017F**	1
02	Deflector Oil Cooler Duct RH			**A120B4018F**	1
03	Screen Oil Cooler Duct LH			**A120B4071F**	1
04	Screen Oil Cooler Duct RH			**A120B4072F**	1
05	Deflector, oil cooler LH		17.5 MY	**A147B4005F**	1
05a	Deflector, no oil cooler LH		17.5 MY	**A147B4007F**	1
06	Deflector, oil cooler RH		17.5 MY	**A147B4006F**	1
06a	Deflector, no oil cooler RH		17.5 MY	**A147B4008F**	1
07	Screw M5 x 18 skt btn flg hd			**A138W5001F**	10
08	Washer M5 x 19 x 1.4			**B082W4107F**	10
09	Speed Nut M5			**B100W6372F**	10

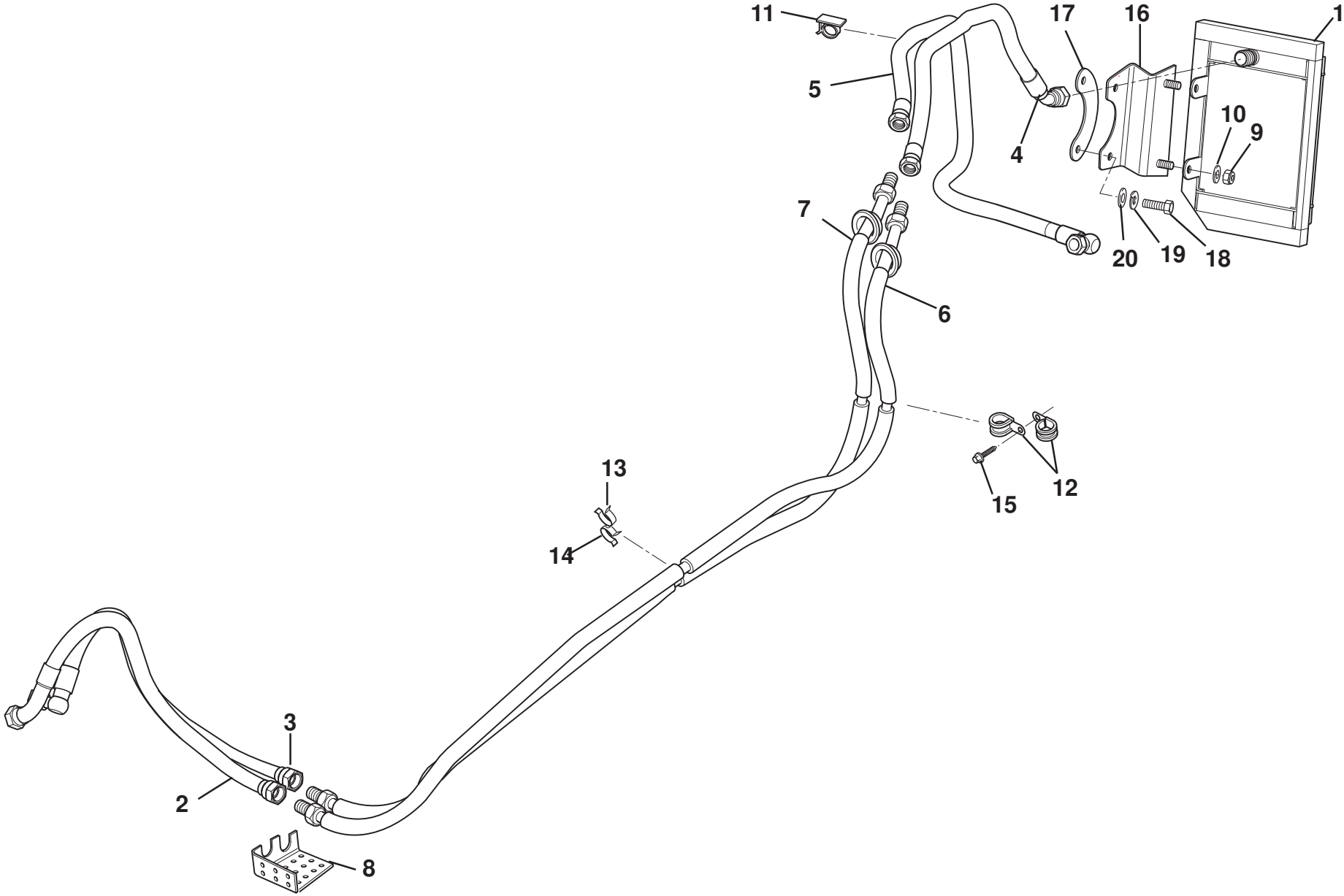

ELISE

46.07

Function Code 46.07 Single Oil Cooler System Engine

Dep	Part Description	Remarks	Option	Part Number	Qty
01	Assembly Oil Cooler, oil to air		2ZR	**A120K0044F**	1
02	Hose Assembly Oil Cooler Feed		2ZR	**B120K0053F**	1
03	Hose Assembly Oil Cooler Return		2ZR	**B120K0054F**	1
04	Hose Oil Cooler Feed Front		2ZR	**A120K0076F**	1
05	Hose Oil Cooler Return Front		2ZR	**A120K0075F**	1
06	Pipe Oil Cooler Feed	Includes grommet	2ZR	**A120K0074F**	1
07	Pipe Oil Cooler Return	Includes grommet	2ZR	**A120K0073F**	1
08	Bracket Support, oil cooler pipes		2ZR	**B120K0077F**	1
09	Nut Nyloc M8			**A907E6284F**	2
10	Washer Flat M8 x 20.5 x 1.4			**A082W4169F**	2
11	Clip Assembly, oil cooler pipes			**A120W6760F**	1
12	'P' Clip			**A120W6906F**	2
13	Clip Swivel 16mm, male			**A132W6091F**	1
14	Clip Swivel 16mm, female			**A082W6587F**	1
15	Screw M6 x 16 hex flg			**A132W5003F**	1
16	Bracket, oil cooler mounting, RH			**A120A0132F**	1
17	Nutplate, bracket to crash structure, RH			**A120K0017F**	1
18	Screw, M8 x 20, hex hd., bracket to nutplate			**A075W1038Z**	2
19	Washer, spring, M8, bracket to nutplate			**A075W4036Z**	2
20	Washer, flat, M8 x 16.6 x 1.4, bracket to nutplate			**A075W4020Z**	2

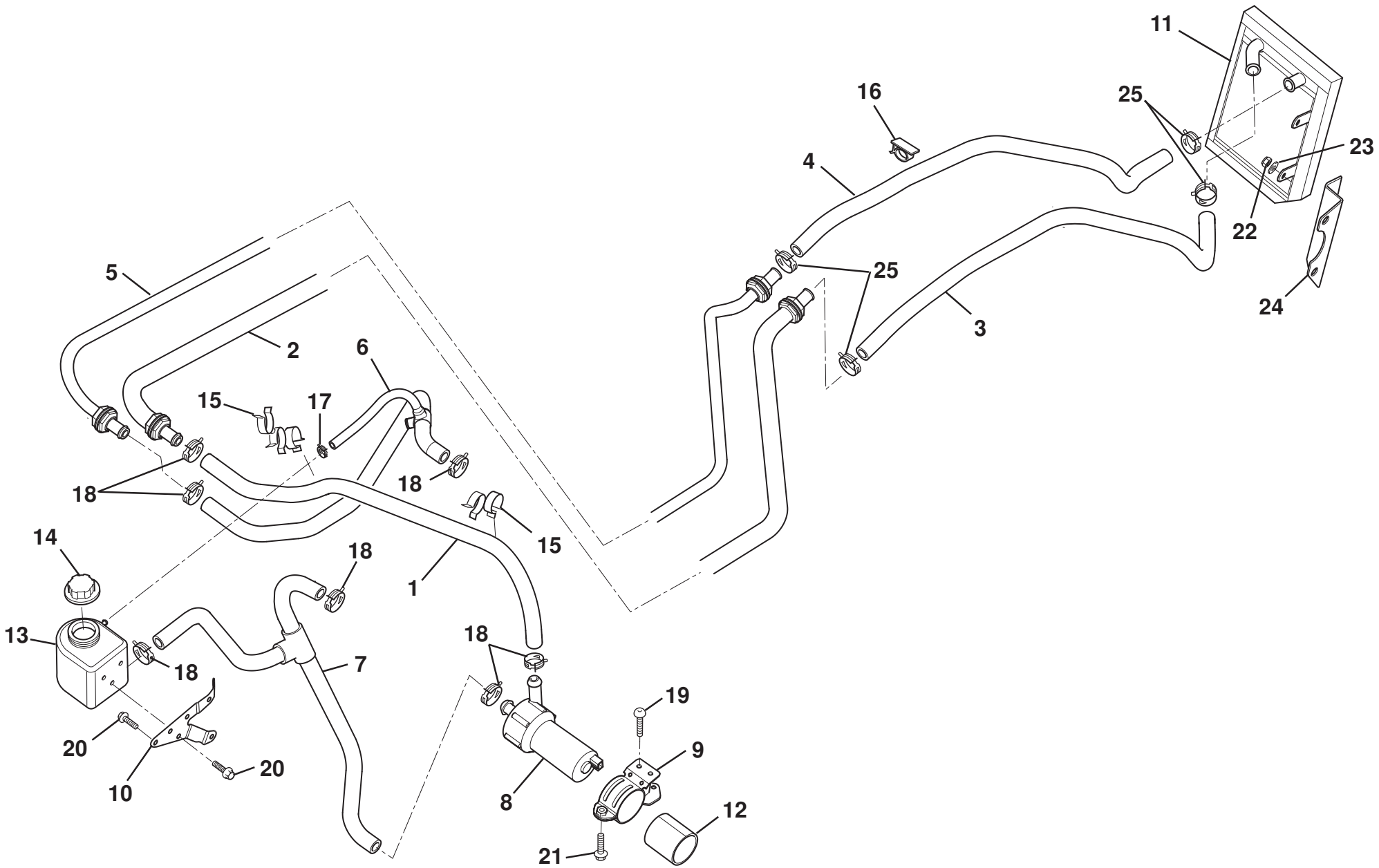
11
16
25
23
4
22
25
24
5
3
2
6
15
17
18
18
15
14
18
1
13
18
7
18
19
20
9
20
10
8
12
21

ELISE

46.11

Function Code 46.11 Chargecooler, Pipes & Hoses

Dep	Part Description	Remarks	Option	Part Number	Qty
01	Hose, water feed		2ZR	**A120K0046F**	1
02	Pipe, Assembly, water feed		2ZR	**A120K0050F**	1
03	Hose, water front		2ZR	**A120K0049F**	1
04	Hose, water front		2ZR	**A120K0049F**	1
05	Pipe Assembly, water return		2ZR	**A120K0047F**	1
06	Hose, water return, return		2ZR	**A120K0051F**	1
07	Hose, cooler to pump		2ZR	**A120K0045F**	1
08	CAC Pump		2ZR	**A120K6008F**	1
09	Bracket Assembly CAC Pump		2ZR	**A120K0057F**	1
10	Bracket, header tank mounting		2ZR	**A120K0059F**	1
11	Cooler		2ZR	**A120K0043F**	1
12	Rubber Mat, pump		2ZR	**A120M0024F**	1
13	Header Tank		2ZR	**A120K0058F**	1
14	Cap Header Tank		2ZR	**A120K6009F**	1
15	Hose Clip, hoses to pipes			**A116K6692F**	5
16	Clip Assembly, cooler hose			**A120W6760F**	4
17	Clamp Hose, 13.7-15.2mm			**A116K6017F**	1
18	Clamp Hose, 26mm			**A120W6776F**	7

Function Code 46.11 Chargecooler, Pipes & Hoses

Dep	Part Description	Remarks	Option	Part Number	Qty
19	Screw M8 x 20 skt btn			**A132W5015F**	3
20	Screw M8 x 16 hex flg			**A117W2202F**	4
21	Screw M6 x 16 hex flg			**A132W5003F**	3
22	Nut Nyloc M8			**A907E6284F**	2
23	Washer Flat M8 x 25 x 1.5			**B075W4021Z**	2
24	Bracket, cooler mounting			**A120A0131F**	1
25	Hose Clip, hoses to bodyside pipes			**A116K6016F**	4

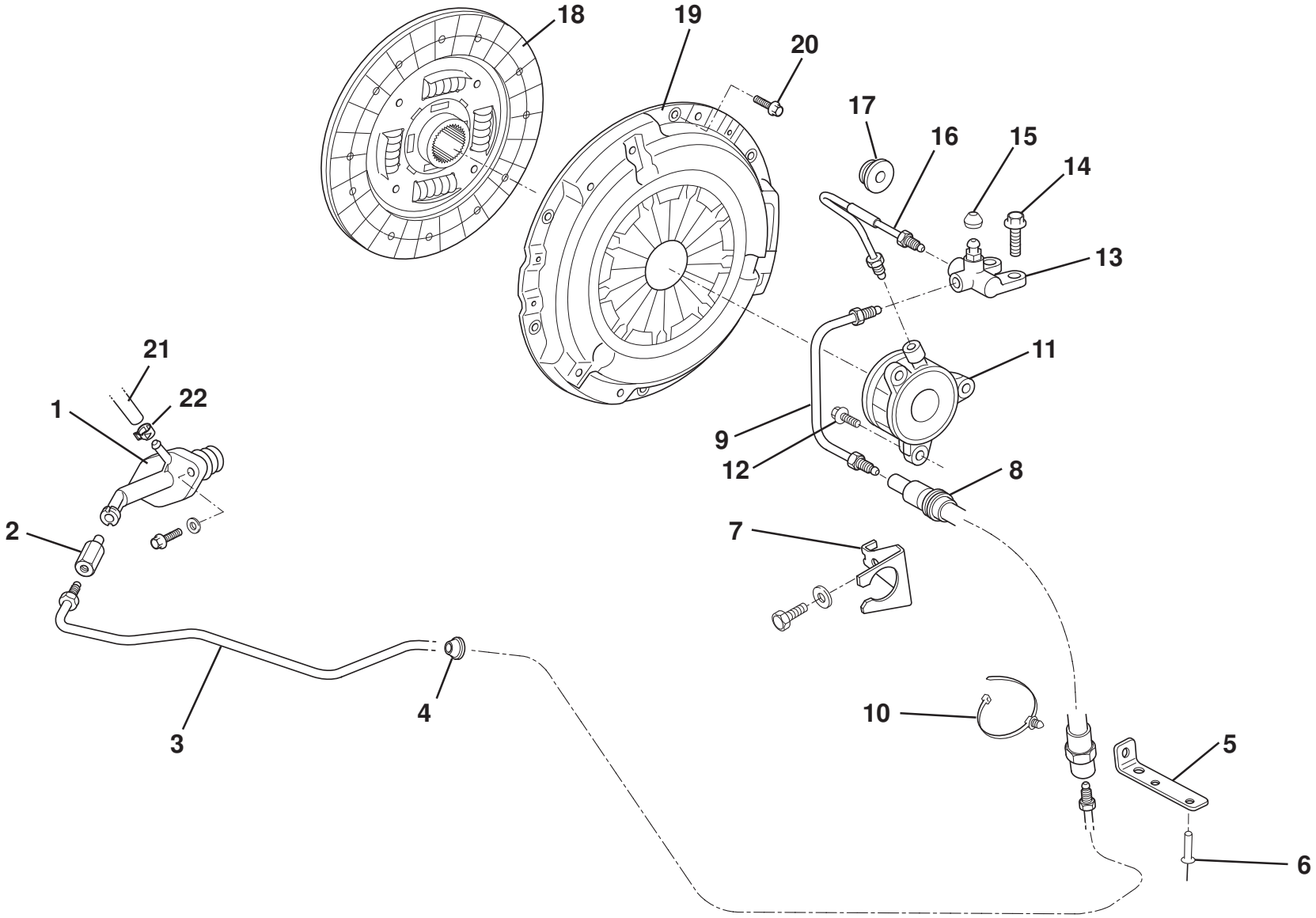

ELISE

47.01c

Function Code 47.01c Clutch & Release Mechanism, Elise 2011 MY, 1ZR, 2ZR

Dep	Part Description	Remarks	Option	Part Number	Qty
01	Clutch Release Master Cylinder, LEV 2			**A120Q0007H**	1
02	Quick Connector, pipe to master cylinder		Common	**A116Q6001F**	1
03a	Pipe, clutch, front, RHD			**B120Q0002F**	1
03b	Pipe, clutch, front, LHD			**B120Q0001F**	1
04	Grommet, front pipe			**A075U6043Z**	1
05	Bracket, clutch hose to chassis			**B120Q0005B**	1
06	Pop Rivet, bracket to chassis			**A111W6613F**	2
07	Bracket, clutch hose to transmission			**A120Q0011A**	1
08	Hose, pipe front to pipe rear			**A116Q0016**	1
09	Pipe, clutch, rear			**A120Q0010A**	1
10	Cable Tie			**A116K6020F**	1
11	Cylinder Set, clutch release			**A120Q7104S**	1
12	Bolt, cylinder set, clutch release			**A120F7174S**	3
13	Bleeder Sub Assembly, clutch release			**A120Q7106S**	1
14	Bolt, bleeder sub assembly to gearbox			**A132E0059S**	2
15	Cap, bleeder plug			**A120Q6014S**	1
16	Pipe, clutch rel. w/brg to bleeder			**A120Q7109S**	1
17	Grommet, clutch tube			**A120Q7101S**	1

Function Code 47.01c Clutch & Release Mechanism, Elise 2011 MY, 1ZR, 2ZR

Dep	Part Description	Remarks	Option	Part Number	Qty
18	Clutch Driven Plate		1ZR	**A120Q0015S**	1
18a	Clutch Driven Plate		2ZR A120F0039F R/B	**A120F0043F**	1
19	Clutch Cover Assembly		1ZR	**A120Q0016S**	1
19a	Clutch Cover Assembly		2ZR	**A120F0034F**	1
20	Bolt, hex. flg. hd., cover to flywheel			**A120Q6002S**	6
21	Hose, reservoir to master cylinder	Cut to fit for LHD		**A120J0089S**	1
22	Clip Oetiker			**A124W6818F**	2

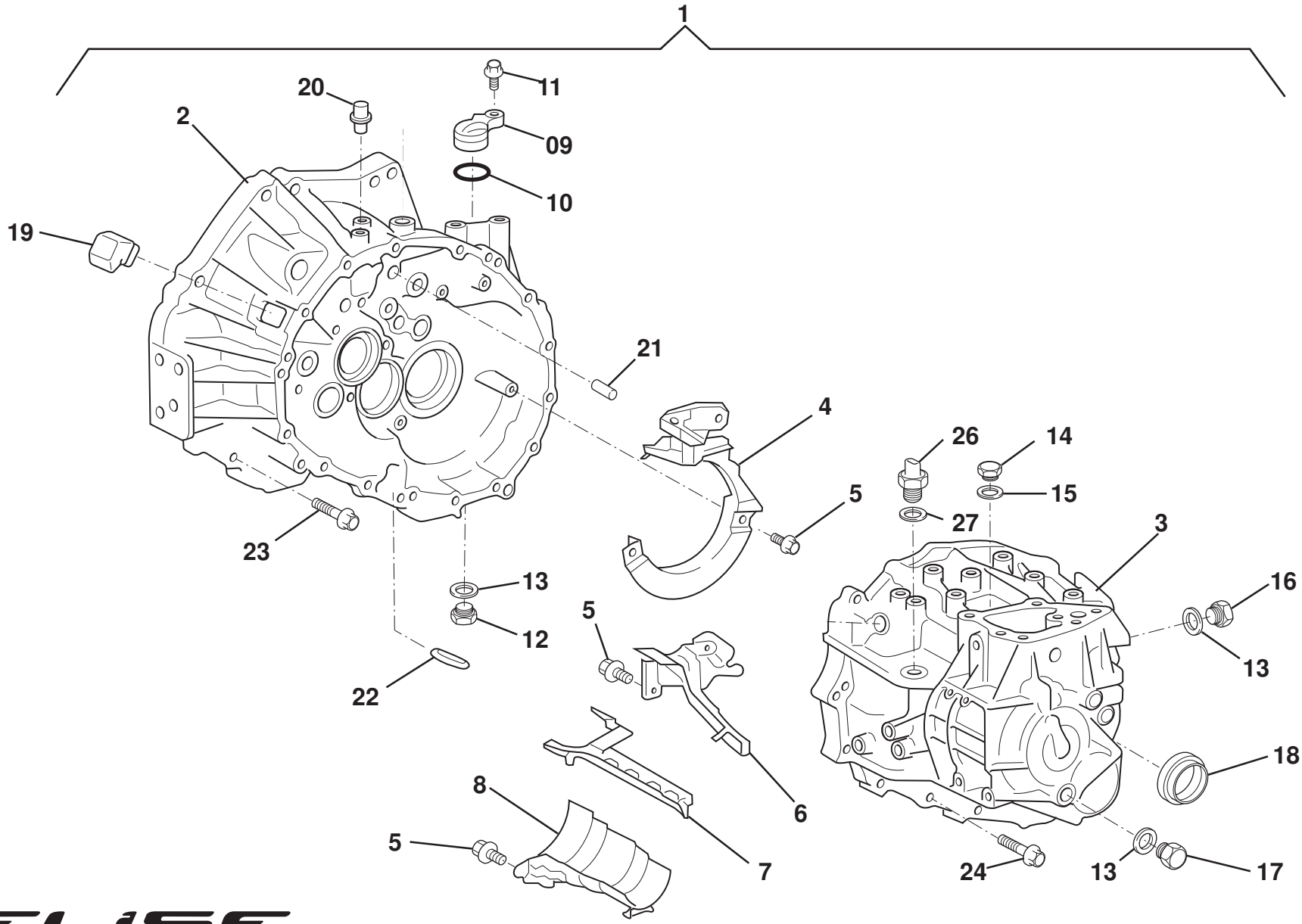
1
20
11
2
09
10
19
21
4
26
14
5
15
27
3
23
13
16
5
12
13
22
18
6
8
5
7
24
13
17

ELISE

47.03a

Function Code 47.03a Transmission Assembly, Elise 2011 MY, 1ZR , 2ZR

Dep	Part Description	Remarks	Option	Part Number	Qty
01	Transaxle Assembly, manual EC60			**A120F7000S**	1
02	Case Transaxle, manual			**A120F7005S**	1
03	Case Transmission			**A120F7003S**	1
04	Separrator, transmission oil			**A120F7111S**	1
05	Bolt , flange			**A120F7371S**	10
06	Separrator, transmission oil			**A120F7110S**	1
07	Pipe, oil receiver			**A120F7107S**	1
08	Separrator Sub-Assy, transmission oil			**A120F7106S**	1
09	Cover Sub-Assy, speedometer driven hole			**A120F6244S**	1
10	O Ring			**A120F6254S**	1
11	Bolt, flange			**A132E6468S**	1
12	Plug, filler no. 2			**A120F7187S**	1
13	Gasket, filler no. 2			**A120F6043S**	3
14	Plug ,filler no. 1			**A120F7185S**	1
15	Gasket, filler no. 1			**A120F7202S**	1
16	Plug, manual			**A120F6041S**	1
17	Plug Sub-Assembly			**A131F6053S**	1
18	Oil Seal, drive shaft	See 47.15a			

Function Code 47.03a Transmission Assembly, Elise 2011 MY, 1ZR , 2ZR

Dep	Part Description	Remarks	Option	Part Number	Qty
19	Cover, clutch housing			**A120Q7100S**	1
20	Plug Breather			**A120F6038S**	1
21	PIn			**A120E6196S**	5
22	Magnet, transmission			**A120F7154S**	1
23	Bolt, flange			**A132E6418S**	7
24	Bolt, flange			**A120F7370S**	16
25	Gasket Kit, manual	Not illustrated		**A120F7372S**	1
26	Switch, reverse lamp			**A132F6132S**	1
27	Seal, reverse lamp switch			**A120F6043S**	1

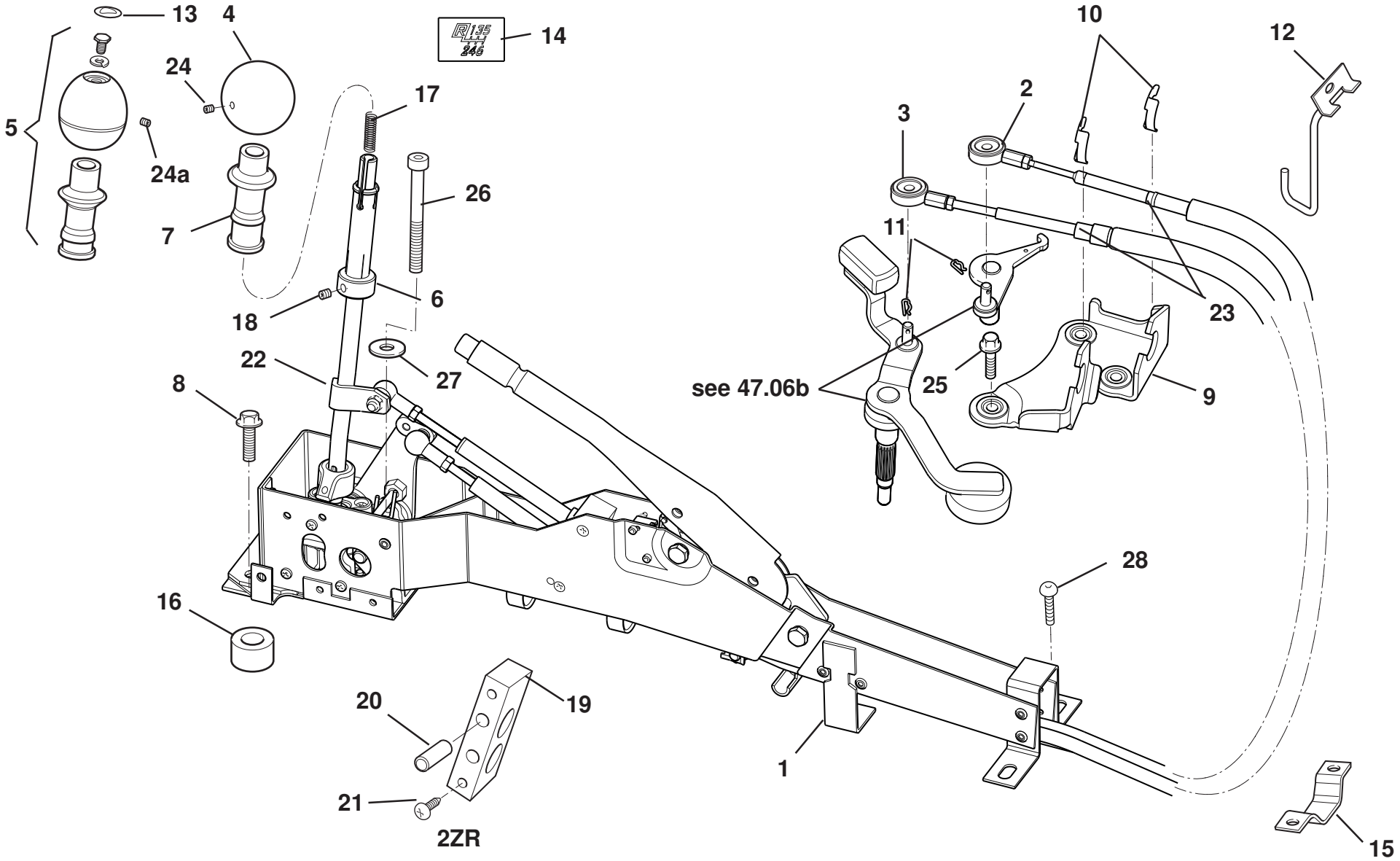

ELISE

47.05

Updated 3rd March 2017

Function Code 47.05 Gearchange Mechanism, External

Dep	Part Description	Remarks	Option	Part Number	Qty
01	Gearshift/Parking Brake Assembly, 6 speed, 1ZR, RHD	12mm shaft thread	1ZR	**A120F4004F**	1
01a	Gearshift/Parking Brake Assembly, 6 speed, 1ZR, LHD	12mm shaft thread	1ZR	**A120F4003F**	1
01b	Gearshift/Parking Brake Assembly, 6 speed, 2ZR, RHD	Supplied with gear change cables & abutment	2ZR	**A120F4006F**	1
01c	Gearshift/Parking Brake Assembly, 6 speed, 2ZR, LHD	Supplied with gear change cables & abutment	2ZR	**A120F4005F**	1
02	Cable, gearshift, Cofle	Yellow mark	1ZR	**A120F0036S**	1
02a	Cable, gearshift, Ringspan	Blue with yellow heatshrink	2ZR	**A120F0045F**	1
03	Cable, crossgate, Cofle	Light blue mark	1ZR	**A120F0037S**	1
03a	Cable, crossgate, Ringspan	Not including item 40, blue with black heatshrink	2ZR	**A120F0044F**	1
04	Gearknob, six speed, 12mm thread, Cofle			**D120U0012F**	1
05	Gearknob Assembly (including lift tube)		Gulf States	**C132U0210J**	1
06	Lift Tube Adaptor, lift tube to mechanism	Cofle		**A120F6274S**	1
07	Lift Tube			**B120U0017F**	1
08	Screw M8 x 25 flg hd			**A116W5238F**	2
09	Abutment, tranmission casing			**A120F7157S**	1
10	'C' Clip, cables to abutment			**A082F6577S**	2
11	'R' Clip, cables to levers			**A075W6175Z**	2
12	Guide, gearshift cables	Bolted to transmission		**A120F0005F**	1

Function Code 47.05 Gearchange Mechanism, External

Dep	Part Description	Remarks	Option	Part Number	Qty
13	Badge; LOTUS, gear knob, silver		Gulf States	**A132V0178F**	1
14	Decal, gearshift 6sp	For item 05	Gulf States	**A120U0063F**	1
15	Retainer, gearchange cables	On shear panel		**A116F0013F**	1
15a	Retainer, gearchange cables	On shear panel	2ZR	**A138F0015F**	1
16	Spacer, gearshift asm, chassis	Cofle type only		**A120F0015F**	1
17	Spring, gear lever lift tube	Cofle type only		**A132F0191S**	1
18	Grub Screw, lift tube retention	Cofle type only		**A120F0028S**	1
19	Abutment, gearchange cables		2ZR	**A132F0219F**	1
20	Roll Pin, 6 x 30 located in abutment		2ZR	**A132F6305F**	2
21	Screw M5 x 12, csk pozi, abutment fixing		2ZR	**A100W5176F**	2
22	Gear Lever, Cofle, 12mm shaft thread LHD	Contact Aftersales	1ZR, 2ZR (Exige S)		1
22a	Gear Lever, Cofle, 12mm shaft thread RHD	Contact Aftersales	1ZR, 2ZR (Exige S)		1
23	Cable Adjuster Rear		2ZR	**A120F0046F**	2
24	Knurl Point Grub Screw, M5 x 16, knob to lever	Order with knob		**A120W5292F**	1
24a	Grub Screw M5 x 5		Gulf States	**A132W1000F**	1
25	Bolt, cable abutment			**A120F7173S**	1
26	Screw, M8 x 45, skt. cap hd, assembly to chassis			**A111W7137F**	1
27	Washer M8 x 25 x 1.5, assembly to chassis			**B075W4021Z**	1
28	Screw, M8 x 20, skt. button hd., assembly rear to chassis			**A075W7022Z**	2

Function Code 47.05 Gearchange Mechanism, External

Dep	Part Description	Remarks	Option	Part Number	Qty
29	Tool, gear lever bush guide	Not illus. For gear lever replacement: See Service Notes section FJ		**A120U0054S**	1

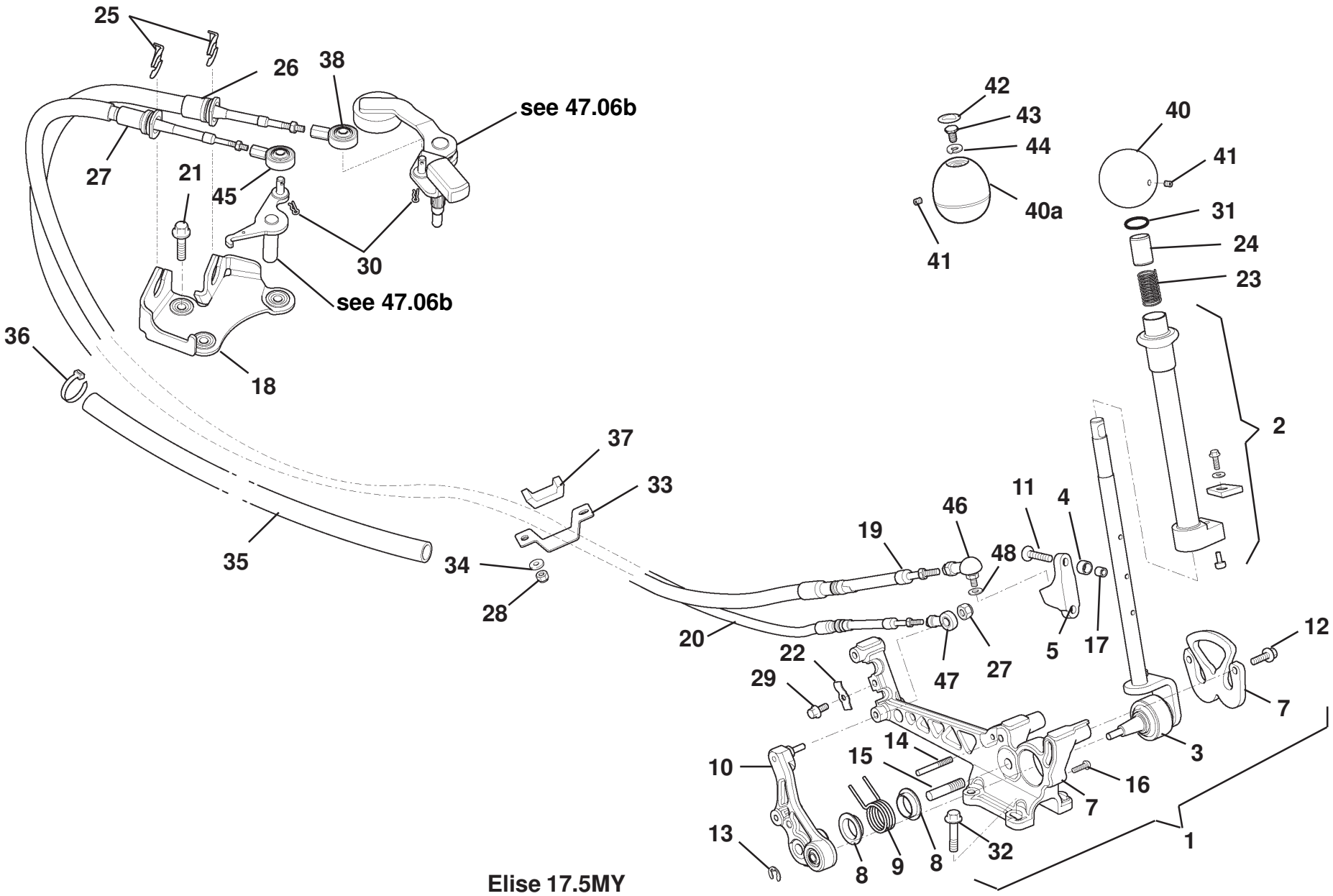

Elise 17.5MY

ELISE

47.05b

Updated 1st May 2018

Function Code 47.05b Gearchange Mechanism, External, Exposed Gearshift

Dep	Part Description	Remarks	Option	Part Number	Qty
01	Gear Shift Hand Unit Assembly	includes items 02 - 17		**B138F0059F**	1
02	Lift Tube assembly			**A138F0063F**	1
03	Gear Shift Lever Assembly			**A138F0089F**	1
04	Bearing			**A132F6339F**	2
05	Bracket Gear Shift Cable			**A138F0071F**	1
06	Spring Plate, reverse block			**A138F0070F**	1
07	Gearshift Housing			**B138F0069F**	1
08	Bearing			**A132F6350F**	2
09	Spring, cross gate			**A132F0284F**	1
10	Arm assembly, crossgate			**A138F0072F**	1
11	Screw M5 x 25 skt hd			**A138W5014F**	2
12	Screw M6 x 20 skt btn hd			**A132W5044F**	2
13	Circlip, E type			**A132F6336F**	1
14	Pin Grooved 5 x 40			**A132F6335F**	1
15	Pin Grooved 10 x 55			**A132F0273F**	1
16	Screw M5 x 12 cap btn hd			**A111W7183F**	1
17	Spacer			**A132F6330F**	2
18	Abutment, transmission casiing			**A120F7157S**	1

Function Code 47.05b Gearchange Mechanism, External, Exposed Gearshift

Dep	Part Description	Remarks	Option	Part Number	Qty
19	Cable, gear shift cable			**B147F0003F**	1
20	Cable, crossgate			**B147F0007F**	1
21	Bolt, abutment			**A120F7173S**	1
22	Cable Clamp Gearshift			**B132F0291F**	1
23	Spring Lift Collar			**A132F6338F**	1
24	Sleeve Lift Collar			**A132F0267F**	1
25	Retainer, gear cables			**A147F6000F**	2
26	Cable Adjuster Rear, shift			**A147F0010F**	1
27	Retainer, gear cables, crossgate			**A147F0011F**	1
28	Nut Nyloc M5			**A075W3008Z**	4
29	Bolt M6 x 12 hex flg hd			**A132W5010F**	2
30	'R' Clip			**A075W6175F**	2
31	'O' Ring			**A132F6337F**	1
32	Screw M6 x 20 hex flg hd			**A132W5004F**	4
33	Retainer Gear Cables			**A138F0015F**	1
34	Washer M5 x 10 x 0.8			**A075W4011Z**	2
35	Heat Sleeve			**A132S0119F**	2
36	Cable Tie			**A132W6095F**	4
37	Foam Seal			**A082U6065F**	1
38	Rod End Isolated, shift			**A132F0363F**	1
40	Gearknob			**D120U0012F**	1

Function Code 47.05b Gearchange Mechanism, External, Exposed Gearshift

Dep	Part Description	Remarks	Option	Part Number	Qty
40a	Gearknob Assembly, leather, excluding badge	Black lower half	Gulf States	**B132U0210J**	1
41	Grub Screw M5 x 16			**A120W5292F**	1
41a	Grub Screw M5 x 5		Gulf States	**A132W1000F**	
42	Badge; LOTUS, gear knob, silver		Gulf States	**A132V0178F**	1
43	Screw M6 x 12 hex hd thin		Gulf States	**A100W1055F**	1
44	Washer Spring M6		Gulf States	**A075W4035Z**	1
45	Rod End Isolated, crossgate			**A132F6348F**	1
46	Rod End, shift			**A132F6351F**	1
47	Rod End, crossgate			**A132F6332F**	1
48	Washer Flat M6 x 12.2 x 1.4			**A075W4013Z**	1

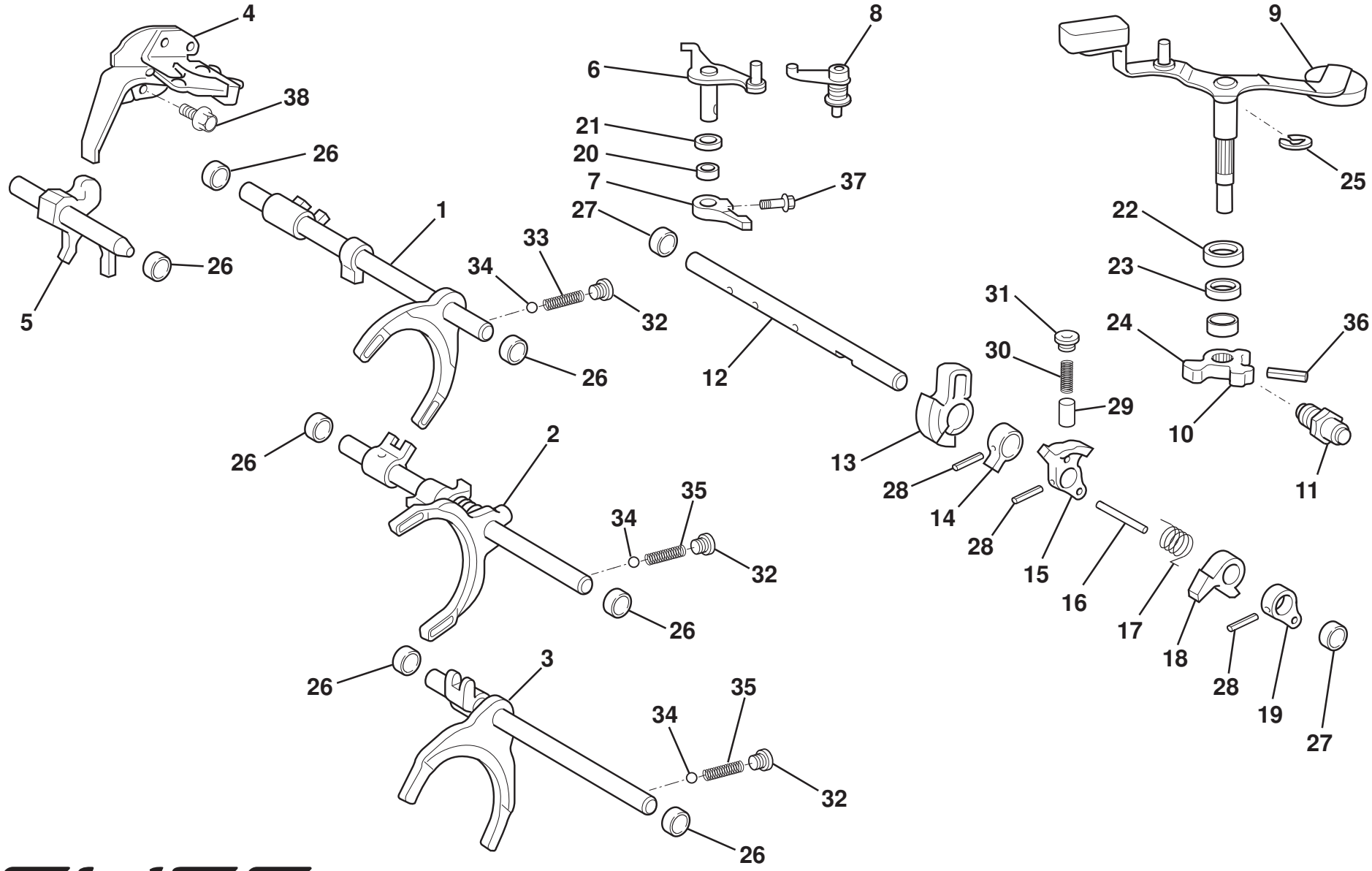
4
38
26
5
26
1
33
34
32
26
6
8
21
20
7
37
27
12
9
25
22
23
31
24
36
30
29
10
11
13
28
14
28
15
16
17
18
28
19
27
2
35
34
32
26
26
3
35
34
32
26
26

ELISE

47.06b

Function Code 47.06b Selector Mechanism, Internal, Elise 2011 MY, 1ZR, 2ZR

Dep	Part Description	Remarks	Option	Part Number	Qty
01	Shaft Assembly, gear shift fork, no.3			**A120F7117S**	1
02	Shaft Assembly, gear shift fork, no.2			**A120F7116S**	1
03	Shaft Assembly, gear shift fork, no.1			**A12OF7112S**	1
04	Reverse Shift Arm, bracket assembly			**A120F7115S**	1
05	Shaft Assembly, reverse shift fork			**A120F7123S**	1
06	Select Lever, outer			**A120F7122S**	1
07	Select Lever, inner			**A120F7121S**	1
08	Pin Assembly, reverse restrict			**A120F7127S**	1
09	Shift Lever, outer			**A120F7120S**	1
10	Shift Lever, inner no. 1			**A120F7118S**	1
11	Ball assembly, lock			**A131F6039S**	1
12	Shaft, shift and select			**A120F7124S**	1
13	Plate, shift inter lock			**A120F7125S**	1
14	Shift Lever, inner no. 2			**A120F7119S**	1
15	Shift Lever, inner			**A120F7158S**	1
16	Pin			**A120F7176S**	1
17	Spring, torsion			**A120F7258S**	1
18	Head, reverse pre-balk, no. 1			**A120F7114S**	1

Function Code 47.06b Selector Mechanism, Internal, Elise 2011 MY, 1ZR, 2ZR

Dep	Part Description	Remarks	Option	Part Number	Qty
19	Block, select stopper			**A120F7128S**	1
20	Bush			**A120F6256S**	1
21	Oil Seal, outer select lever			**A120F7178S**	1
22	Washer, shift lever housing, no. 1			**A120F7126S**	1
23	Oil Seal, outer shift lever			**A120F7179S**	1
24	Bush			**A120F7118S**	1
25	Snap Ring, shift lever outer			**A120F7281S**	1
26	Bush, shaft assembly			**A120F71995**	7
27	Bush, shaft, shift and select			**A120F7200S**	2
28	Pin, slotted spring			**A132F6142S**	3
29	Spring Seat, shift detent assembly			**A120F7129S**	1
30	Spring, shift detent assembly			**A120F7203S**	1
31	Plug, shift detent assembly			**A120F7186S**	1
32	Plug, shift detent assembly			**A120F6163S**	3
33	Spring, shift detent assembly			**A120F7204S**	1
34	Detent Ball			**A120F6164S**	3
35	Spring, shift detent assembly			**A120E7293S**	2
36	Pin, slotted spring			**A120F7177S**	1
37	Bolt, hex socket hd.			**A120F7171S**	1
38	Bolt, flange			**A132E0059S**	2

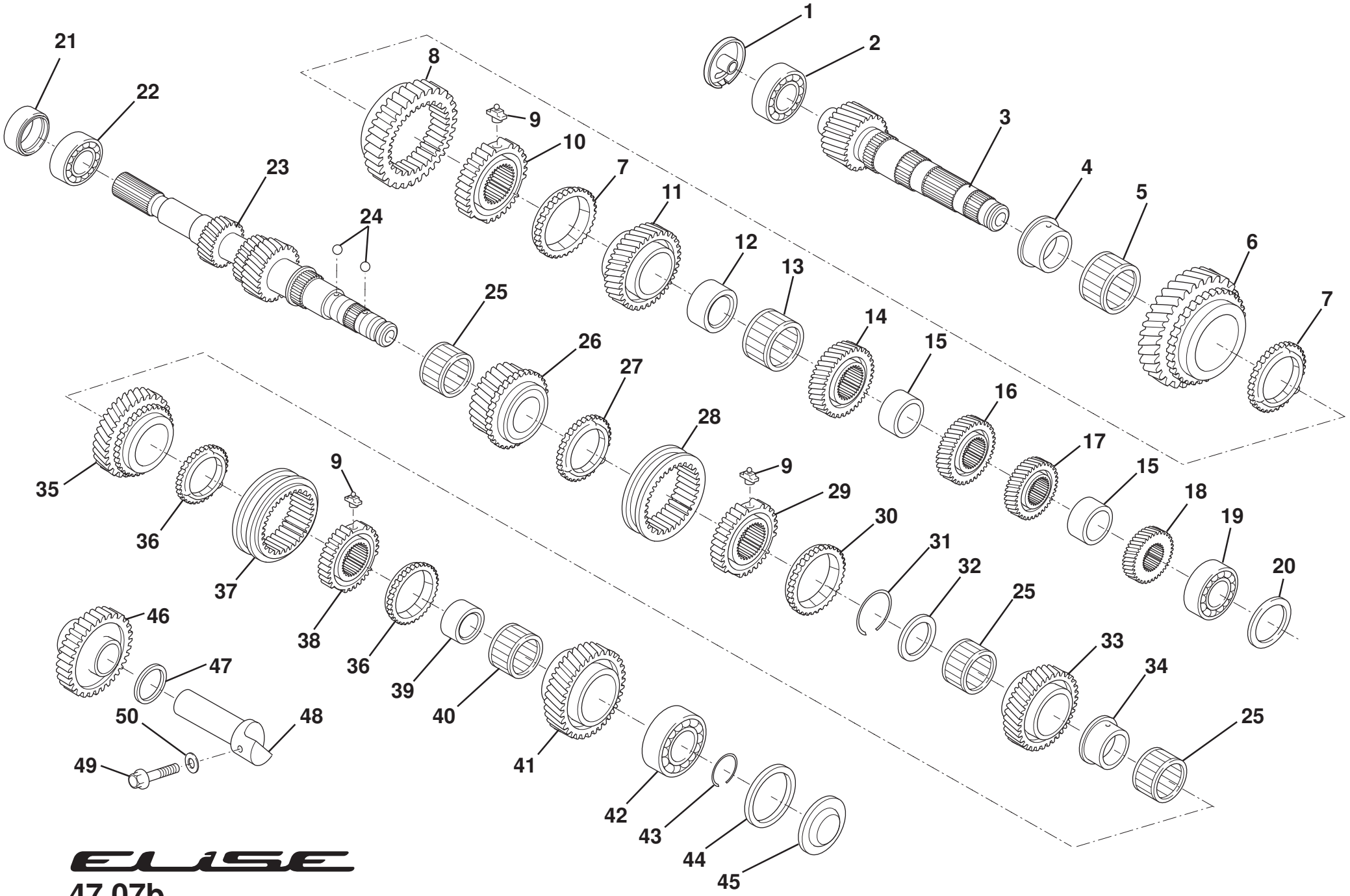
1
2
3
4
5
6
7
8
9
10
11
12
13
14
15
16
17
18
19
20
21
22
23
24
25
26
27
28
29
30
31
32
33
34
35
36
37
38
39
40
41
42
43
44
45
46
47
48
49
50

ELISE

47.07b

Function Code 47.07b Gears, Shafts & Bearings, Elise 2011 MY, 1ZR, 2ZR

Dep	Part Description	Remarks	Option	Part Number	Qty
01	Cover, output shaft			**A120F7108S**	1
02	Bearing, taper roller			**A120F7195S**	1
03	Shaft, output			**A120F7131S**	1
04	Bush, 1st gear			**A120F7135S**	1
05	Bearing, needle roller			**A120F7193S**	1
06	1st Gear			**A120F7134S**	1
07	Synchromesh Ring, no. 1			**A120F7105S**	2
08	Reverse Gear			**A120F7132S**	1
09	Key, synchromesh shifting			**A120F7142S**	9
10	Synchro Hub, no.1			**A120F7139S**	1
11	2nd Gear			**A120F7133S**	1
12	Bearing Inner,2nd gear			**A120F7136S**	1
13	Bearing, needle roller			**A120F7194S**	1
14	Gear 3rd,driven			**A120F7150S**	1
15	Spacer, output gear			**A120F7153S**	2
16	Gear 4th,driven			**A120F7149S**	1
17	Gear 5th,driven			**A120F7151S**	1
18	Gear 6th,driven			**A120F7152S**	2

Function Code 47.07b Gears, Shafts & Bearings, Elise 2011 MY, 1ZR, 2ZR

Dep	Part Description	Remarks	Option	Part Number	Qty
19	Bearing, taper roller			**A120F7196S**	1
20	Shim, bearing to shaft, 33, 1.750			**A120F7314S**	1
20a	Shim, bearing to shaft, 22, 1.775			**A120F7315S**	1
20b	Shim, bearing to shaft, 11, 1.800			**A120F7316S**	1
20c	Shim, bearing to shaft, 00, 1.825			**A120F7317S**	1
20d	Shim, bearing to shaft, 0, 1.850			**A120F7318S**	1
20e	Shim, bearing to shaft, 1, 1.875			**A120F7319S**	1
20f	Shim, bearing to shaft, 2, 1.900			**A120F7320S**	1
20g	Shim, bearing to shaft, 3, 1.925			**A120F7321S**	1
20h	Shim, bearing to shaft, 4, 1.950			**A120F7322S**	1
20i	Shim, bearing to shaft, 5, 1.975			**A120F7323S**	1
20j	Shim, bearing to shaft, 6, 2.000			**A120F7324S**	1
20k	Shim, bearing to shaft, 7, 2.025			**A120F7325S**	1
20kk	Shim, bearing to shaft, 8, 2.050			**A120F7326S**	1
20l	Shim, bearing to shaft, 9, 2.075			**A120F7327S**	1
20ll	Shim, bearing to shaft, A, 2.100			**A120F7328S**	1
20m	Shim, bearing to shaft, B, 2.125			**A120F7329S**	1
20mm	Shim, bearing to shaft, C, 2.150			**A120F7330S**	1
20qn	Shim, bearing to shaft, D, 2.175			**A120F7331S**	1
20nn	Shim, bearing to shaft, E, 2.200			**A120F7332S**	1

Function Code 47.07b Gears, Shafts & Bearings, Elise 2011 MY, 1ZR, 2ZR

Dep	Part Description	Remarks	Option	Part Number	Qty
20o	Shim, bearing to shaft, F, 2.225			**A120F7333S**	1
20oo	Shim, bearing to shaft, G, 2.250			**A120F7334S**	1
20p	Shim, bearing to shaft, H, 2.275			**A120F7335S**	1
20pp	Shim, bearing to shaft, J, 2.300			**A120F7336S**	1
20q	Shim, bearing to shaft, K, 2.325			**A120F7337S**	1
20qq	Shim, bearing to shaft, L, 2.350			**A120F7338S**	1
20r	Shim, bearing to shaft, M, 2.375			**A120F7339S**	1
20rr	Shim, bearing to shaft, N, 2.400			**A120F7340S**	1
20s	Shim, bearing to shaft, P, 2.425			**A120F7341S**	1
20ss	Shim, bearing to shaft, Q, 2.440			**A120F7343S**	1
20t	Shim, bearing to shaft, R, 2.475			**A120F7344S**	1
20tt	Shim, bearing to shaft, S 2.500			**A120F7345S**	1
20u	Shim, bearing to shaft, T, 2.525			**A120F7346S**	1
20uu	Shim, bearing to shaft, U, 2.550			**A120F7347S**	1
20v	Shim, bearing to shaft, V, 2.575			**A120F7348S**	1
20vv	Shim, bearing to shaft, W, 2.600			**A120F7349S**	1
20w	Shim, bearing to shaft, X, 2.625			**A120F7350S**	1
20ww	Shim, bearing to shaft, Y, 2.650			**A120F7351S**	1
20x	Shim, bearing to shaft, Z, 2.675			**A120F7352S**	1
20xx	Shim, bearing to shaft, ZZ, 2.700			**A120F7353S**	1
20y	Shim, bearing to shaft, YY, 2.725			**A120F7354S**	1

Function Code 47.07b Gears, Shafts & Bearings, Elise 2011 MY, 1ZR, 2ZR

Dep	Part Description	Remarks	Option	Part Number	Qty
20yy	Shim, bearing to shaft, XX, 2.750			**A120F7355S**	1
20z	Shim, bearing to shaft, WW, 2.775			**A120F7356S**	1
20zz	Shim, bearing to shaft, VV, 2.800			**A120F7357S**	1
21	Oil Seal, input shaft			**A120F7180S**	1
22	Bearing, ball, input shaft front			**A120F7189S**	1
23	Shaft, input			**A120F7130S**	1
24	Ball Bearing, race lock			**A120F7188S**	2
25	Bearing, needle roller			**A120F7192S**	3
26	3rd Gear, sub-assembly			**A120F7101S**	1
27	Synchromesh Ring, no. 3			**A120F7143S**	1
28	Sleeve, sychro hub, no. 2			**A120F7141S**	1
29	Synchro Hub, no.2			**A120F7140S**	1
30	Synchromesh Ring, no. 4			**A120F7144S**	1
31	Snap Ring, hub to shaft, 0, 2.27			**A120F7273S**	1
31a	Snap Ring, hub to shaft, 1, 2.32			**A120F7274S**	1
31b	Snap Ring, hub to shaft, 2, 2.37			**A120F7275S**	1
31c	Snap Ring, hub to shaft, 3, 2.42			**A120F7276S**	1
31d	Snap Ring, hub to shaft, 4, 2.47			**A120F7277S**	1
31e	Snap Ring, hub to shaft, 5, 2.52			**A120F7278S**	1
31f	Snap Ring, hub to shaft, 6, 2.57			**A120F7279S**	1
31g	Snap Ring, hub to shaft, 7, 2.62			**A120F7280S**	1

Function Code 47.07b Gears, Shafts & Bearings, Elise 2011 MY, 1ZR, 2ZR

Dep	Part Description	Remarks	Option	Part Number	Qty
32	Spacer			**A120F7282S**	1
33	4th Gear, sub-assembly			**A120F7102S**	1
34	Bearing Inner,5th gear			**A120F7137S**	1
35	5th Gear, sub-assembly			**A120F7103S**	1
36	Synchromesh Ring, no. 5			**A120F7147S**	2
37	Sleeve, sychro hub, no. 3			**A120F7146S**	1
38	Synchro Hub, no.3			**A120F7145S**	1
39	Bearing Inner,6th gear			**A120F7138S**	1
40	Bearing, needle roller			**A120F7191S**	1
41	6th Gear, sub-assembly			**A120F7104S**	1
42	Bearing, ball, input shaft rear			**A120F7190S**	1
43	Snap Ring, bearing to shaft, A, 1.65			**A120F7259S**	1
43a	Snap Ring, bearing to shaft, B, 1.70			**A120F7260S**	1
43b	Snap Ring, bearing to shaft, C, 1.75			**A120F7261S**	1
43c	Snap Ring, bearing to shaft, D, 1.80			**A120F7262S**	1
43d	Snap Ring, bearing to shaft, E, 1.85			**A120F7263S**	1
43e	Snap Ring, bearing to shaft, F, 1.90			**A120F7264S**	1
43f	Snap Ring, bearing to shaft, G, 1.95			**A120F7265S**	1
43g	Snap Ring, bearing to shaft, H, 2.00			**A120F7266S**	1
43h	Snap Ring, bearing to shaft, J, 2.05			**A120F7267S**	1
43i	Snap Ring, bearing to shaft, K, 2.10			**A120F7268S**	1

Function Code 47.07b Gears, Shafts & Bearings, Elise 2011 MY, 1ZR, 2ZR

Dep	Part Description	Remarks	Option	Part Number	Qty
43j	Snap Ring, bearing to shaft, L, 2.15			**A120F7269S**	1
43k	Snap Ring, bearing to shaft, M, 2.20			**A120F7270S**	1
43l	Snap Ring, bearing to shaft, N, 2.25			**A120F7271S**	1
43m	Snap Ring, bearing to shaft, P, 2.30			**A120F7272S**	1
44	Shim, bearing to shaft, 10, 1.40			**A120F7358S**	1
44a	Shim, bearing to shaft, 11, 1.45			**A120F7359S**	1
44b	Shim, bearing to shaft, 12, 1.50			**A120F7360S**	1
44c	Shim, bearing to shaft, 13, 1.55			**A120F7361S**	1
44d	Shim, bearing to shaft, 14 1.60			**A120F7362S**	1
44e	Shim, bearing to shaft, 15, 1.65			**A120F7363S**	1
44f	Shim, bearing to shaft, 16, 1.70			**A120F7364S**	1
44g	Shim, bearing to shaft, 17, 1.75			**A120F7365S**	1
44h	Shim, bearing to shaft, 18, 1.80			**A120F7366S**	1
44i	Shim, bearing to shaft, 19, 1.85			**A120F7367S**	1
44j	Shim, bearing to shaft, 08, 1.90			**A120F7368S**	1
44k	Shim, bearing to shaft, 09, 1.90			**A120F7369S**	1
45	Cover, input shaft			**A120F7109S**	1
46	Gear, reverse idler			**A120F7148S**	1
47	Thrust Washer, reverse idler			**A120F7156S**	1
48	Gear, reverse idler			**A120F7155S**	1
49	Bolt, reverse idler retention			**A120F7166S**	1

Function Code 47.07b Gears, Shafts & Bearings, Elise 2011 MY, 1ZR, 2ZR

Dep	Part Description	Remarks	Option	Part Number	Qty
50	Gasket, bolt to casing			**A120F6092S**	1

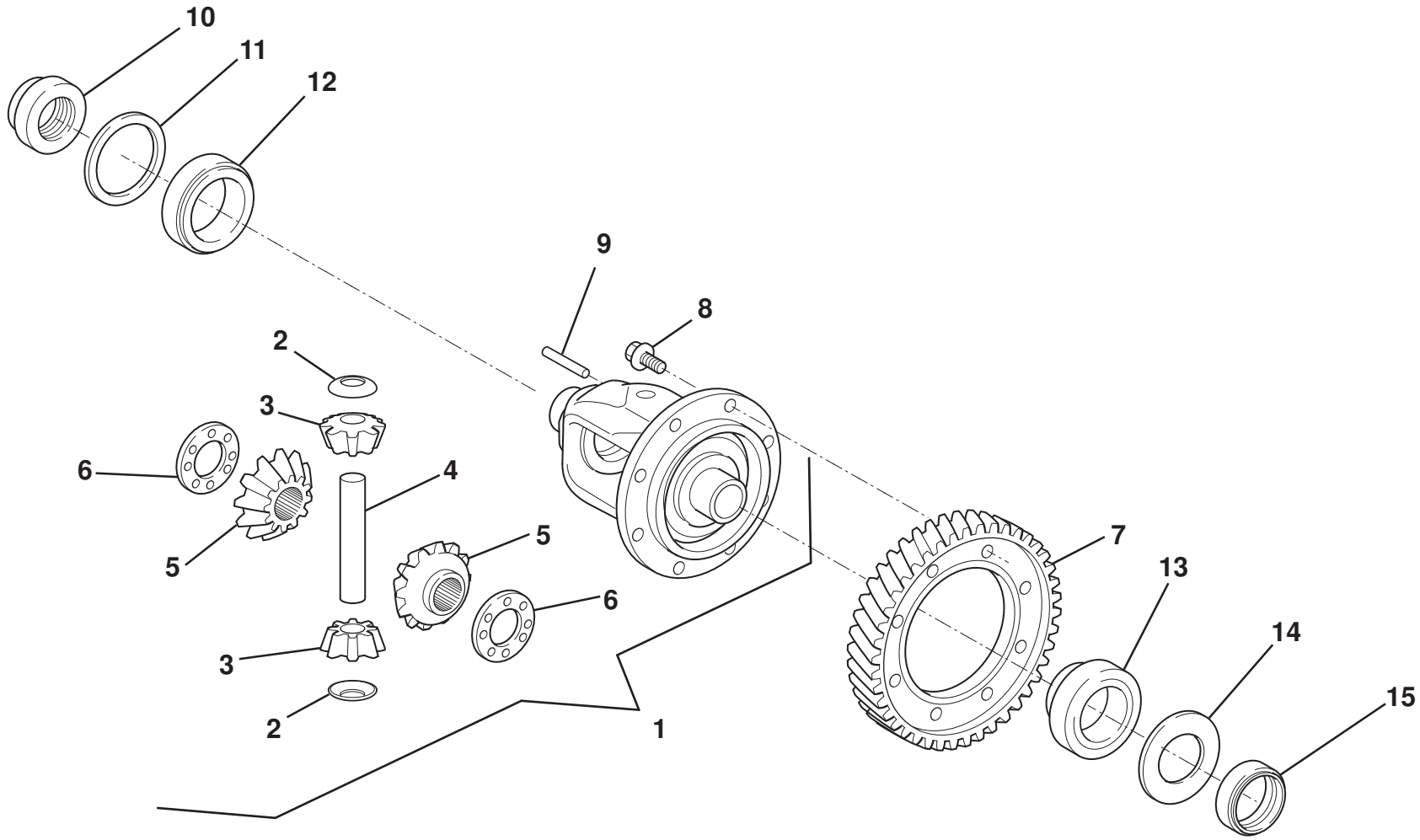

ELISE

47.11a

Service Parts List

Function Code 47.11a Final Drive & Bearings, Elise 2011 MY, 1ZR, 2ZR

Dep	Part Description	Remarks	Option	Part Number	Qty
01	Differential Assembly			**A120F7004S**	1
02	Thrust Washer, planet gear			**A120F6209S**	2
03	Pinion Gear, planet			**A120F7162S**	2
04	Pinion Shaft			**A120F6208S**	1
05	Pinion Gear, sun			**A120F7162S**	2
06	Thrust Washer, sun gear, 0.95mm			**A120F6213S**	1
06a	Thrust Washer, sun gear, 1.00mm			**A120F6210S**	2
06b	Thrust Washer, sun gear, 1.05mm			**A120F6214S**	1
06c	Thrust Washer, sun gear, 1.10mm			**A120F6211S**	1
06e	Thrust Washer, sun gear, 1.20mm			**A120F6212S**	1
07	Final Drive Gear			**A120F7160S**	1
08	Bolt, gear to casing			**A120F7170S**	8
09	Pin, gear to casing			**A120F6216S**	1
10	Oil Seal, output, RH			**A120F7182S**	1
11	Spacer, bearing to housing			**A120F6218S**	1
12	Bearing, taper roller, RH			**A120F7197S**	1
13	Bearing, tapwer roller, LH			**A120F7198S**	1
14	Shim, bearing to housing, 0, 2.100mm			**A120F7283S**	1

Function Code 47.11a Final Drive & Bearings, Elise 2011 MY, 1ZR, 2ZR

Dep	Part Description	Remarks	Option	Part Number	Qty
14a	Shim, bearing to housing, 1. 2.125mm			**A120F7284S**	1
14b	Shim, bearing to housing, 2, 2.150mm			**A120F7285S**	1
14c	Shim, bearing to housing, 3, 2.175mm			**A120F7286S**	1
14d	Shim, bearing to housing, 4, 2.200mm			**A120F7287S**	1
14e	Shim, bearing to housing, 5, 2.225mm			**A120F7288S**	1
14f	Shim, bearing to housing, 6, 2.500mm			**A120F7289S**	1
14g	Shim, bearing to housing, 7, 2.275mm			**A120F7290S**	1
14h	Shim, bearing to housing, 8, 2.300mm			**A120F7291S**	1
14i	Shim, bearing to housing, 9, 2.325mm			**A120F7292S**	1
14j	Shim, bearing to housing, A, 2.350mm			**A120F7293S**	1
14k	Shim, bearing to housing, B, 2.375mm			**A120F7294S**	1
14l	Shim, bearing to housing, C, 2.400mm			**A120F7295S**	1
14m	Shim, bearing to housing, D, 2.425mm			**A120F7296S**	1
14n	Shim, bearing to housing, E, 2.450mm			**A120F7297S**	1
14o	Shim, bearing to housing, F, 2.475mm			**A120F7298S**	1
14p	Shim, bearing to housing, G, 2.500mm			**A120F7299S**	1
14q	Shim, bearing to housing, H, 2.525mm			**A120F7300S**	1
14r	Shim, bearing to housing, J, 2.550mm			**A120F7301S**	1
14s	Shim, bearing to housing, K, 2.575mm			**A120F7302S**	1
14t	Shim, bearing to housing, L, 2.600mm			**A120F7303S**	1
14u	Shim, bearing to housing, M, 2.625mm			**A120F7304S**	1

Function Code 47.11a Final Drive & Bearings, Elise 2011 MY, 1ZR, 2ZR

Dep	Part Description	Remarks	Option	Part Number	Qty
14v	Shim, bearing to housing, N, 2.650mm			**A120F7305S**	1
14w	Shim, bearing to housing, P, 2.675mm			**A120F7306S**	1
14ww	Shim, bearing to housing, Q, 2.700mm			**A120F7307S**	1
14x	Shim, bearing to housing, R, 2.725mm			**A120F7308S**	1
14xx	Shim, bearing to housing, S, 2.750mm			**A120F7309S**	1
14y	Shim, bearing to housing, T. 2.775mm			**A120F7310S**	1
14yy	Shim, bearing to housing, U, 2.800mm			**A120F7311S**	1
14z	Shim, bearing to housing, V, 2.825mm			**A120F7312S**	1
14zz	Shim, bearing to housing, W, 2.850mm			**A120F7313S**	1
15	Oil Seal, output, LH			**A120F7181S**	1

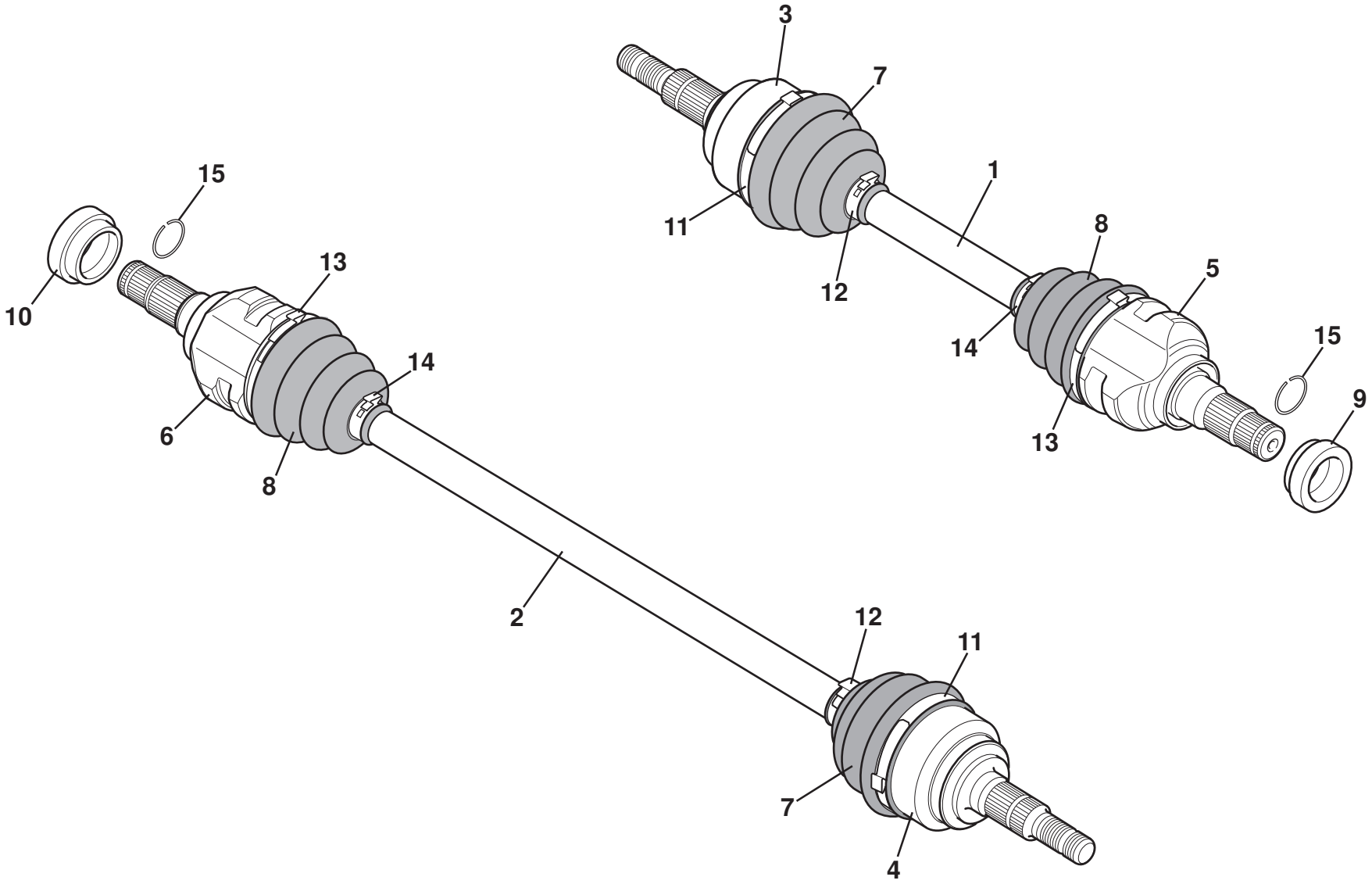

ELISE

47.15a

Service Parts List

Function Code 47.15a Driveshafts & Seals, Elise 2011 MY, 1ZR, 2ZR

Dep	Part Description	Remarks	Option	Part Number	Qty
01	Driveshaft Assembly, LH			**B120D4003F**	1
02	Driveshaft Assembly, RH			**B120D4004F**	1
03	CV Joint & Shaft Assy., outboard, LH			**A120D6011S**	1
04	CV Joint & Shaft Assy., outboard, RH			**A120D6012S**	1
05	CV Joint, inboard			**A120D6013S**	1
06	CV Joint, inboard			**A120D6013S**	1
07	Gaiter Kit, outboard CV joint			**A120D6002S**	2
08	Gaiter Kit, inboard CV joint			**A120D6014S**	2
09	Oil Seal, output, LH			**A120F7181S**	1
10	Oil Seal, output, RH			**A120F7182S**	1
11	Clip, outboard gaiter, large			**A120D6004S**	2
12	Clip, outboard gaiter, small			**A120D6005S**	2
13	Clip, inboard gaiter, large			**A120D6015S**	2
14	Clip, inboard gaiter, small			**A120D6016S**	2
15	Circlip, shaft to transmission			**A120D6017S**	2

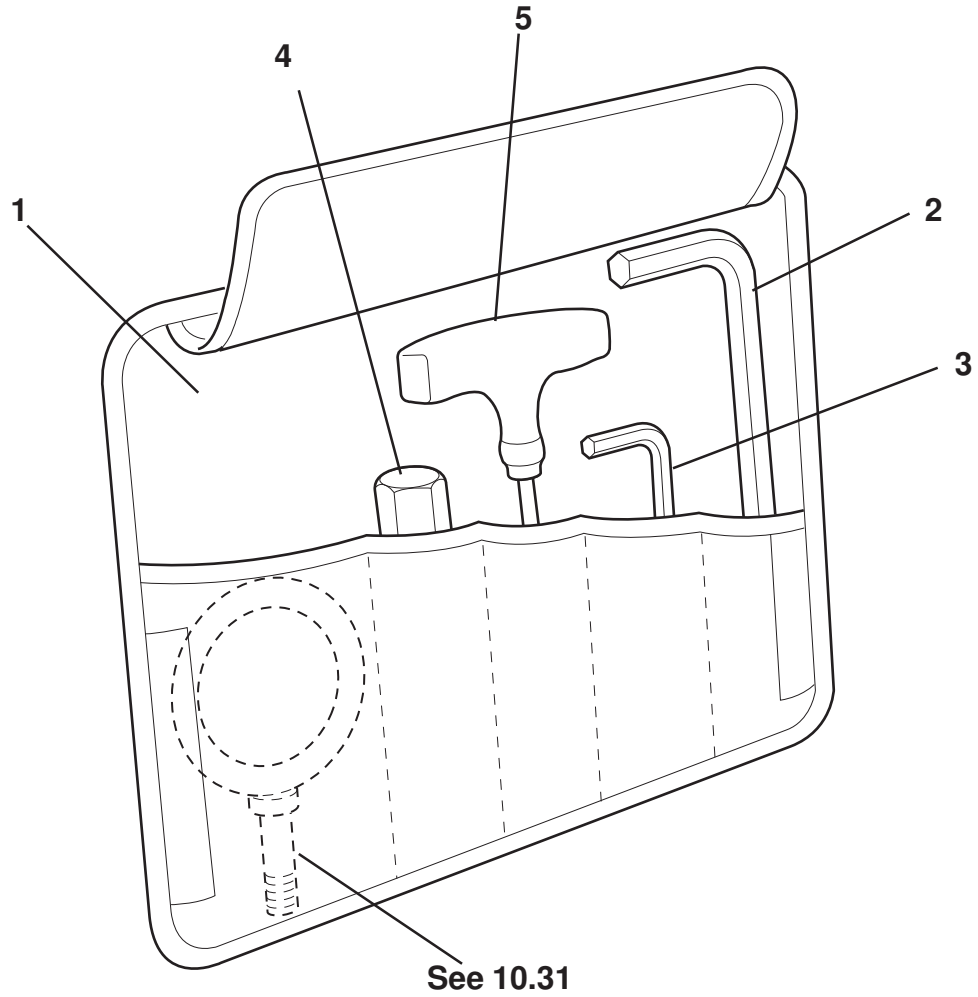

Updated 3rd April 2017

Function Code 60.01 Tool Kit

Dep	Part Description	Remarks	Option	Part Number	Qty
01	Tool Kit	Includes items: 2,3, towing eye		**A120T0005F**	1
02	Allen Key, M5 x 160			**A117T6001H**	1
03	Allen Key, M3 x 63			**A117T6002H**	1
04	Adaptor Key Wheel Bolt			**A132G6003F**	1
05	Hex Ball Driver, 4mm			**A120T6005F**	1
06	Tool, torx screw fixing (M6 & M8)	Not illustrated	Hardtop	**B116V6001F**	1

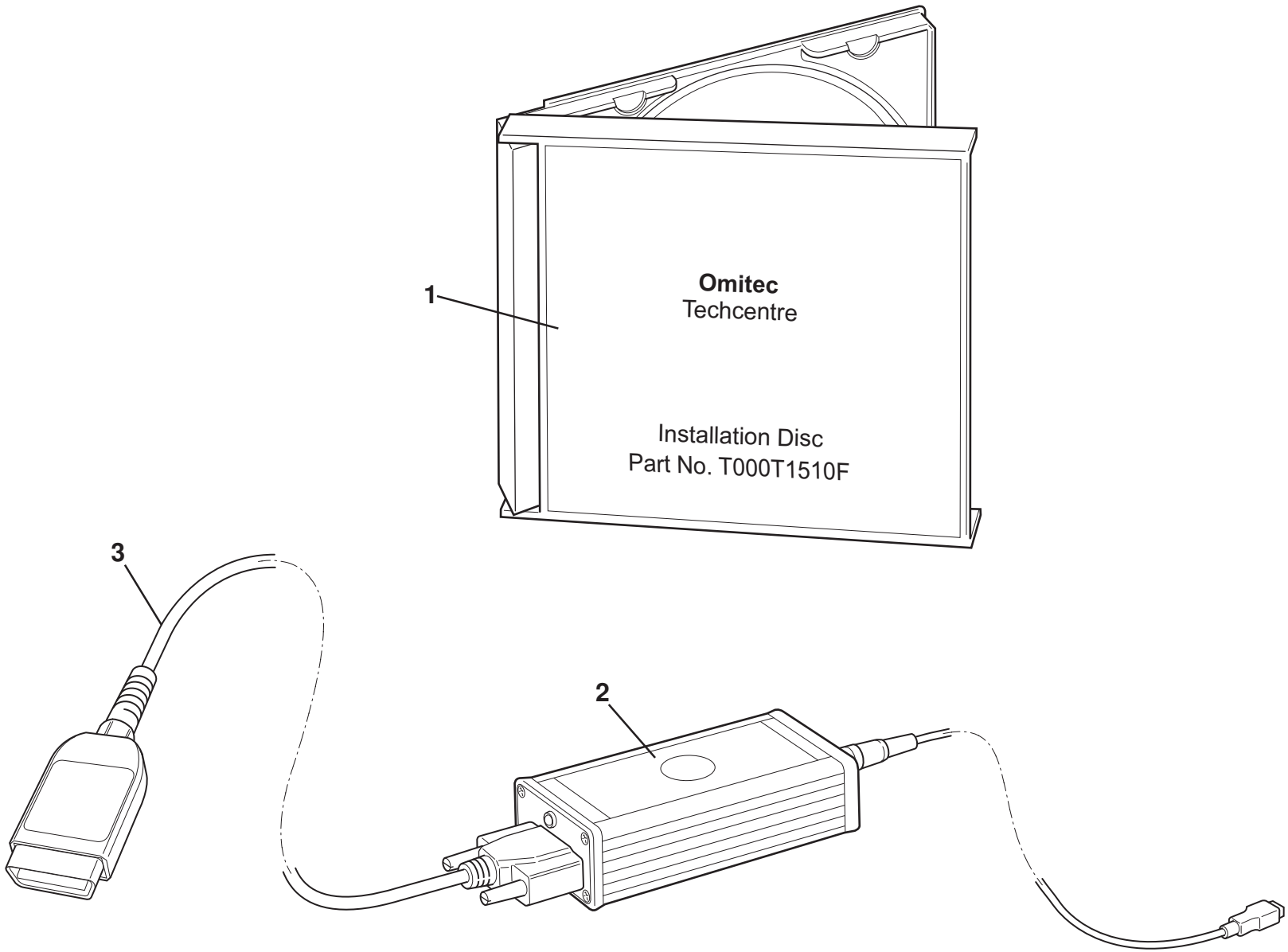
1
Omitec
Techcentre
Installation Disc
Part No. T000T1510F
2
3

ELISE

60.01a

Function Code 60.01a Diagnostic Equipment

Dep	Part Description	Remarks	Option	Part Number	Qty
01	Techcentre Installation Disc			**T000T1510F**	1
02	Kit, Vehicle Communication Device	Includes leads (yellow, 2x USB) and case		**T000T1472F**	1
03	Lead, Programming communications, yellow			**T000T1497F**	1
04	Lead, Vehicle Communication Device (VCD) to PC	Not illustrated		**T000T1537F**	1

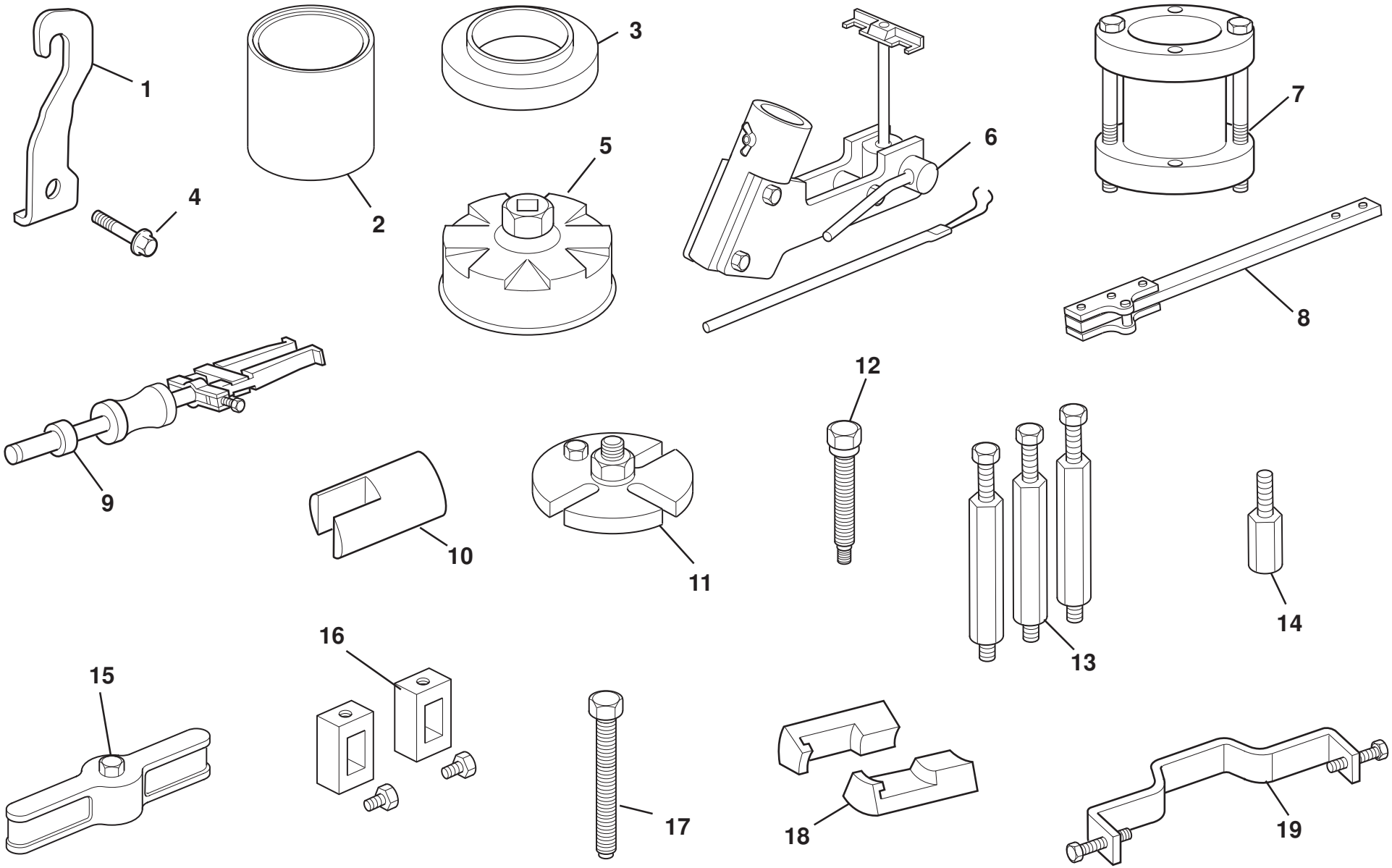

ELISE

60.02 page 1

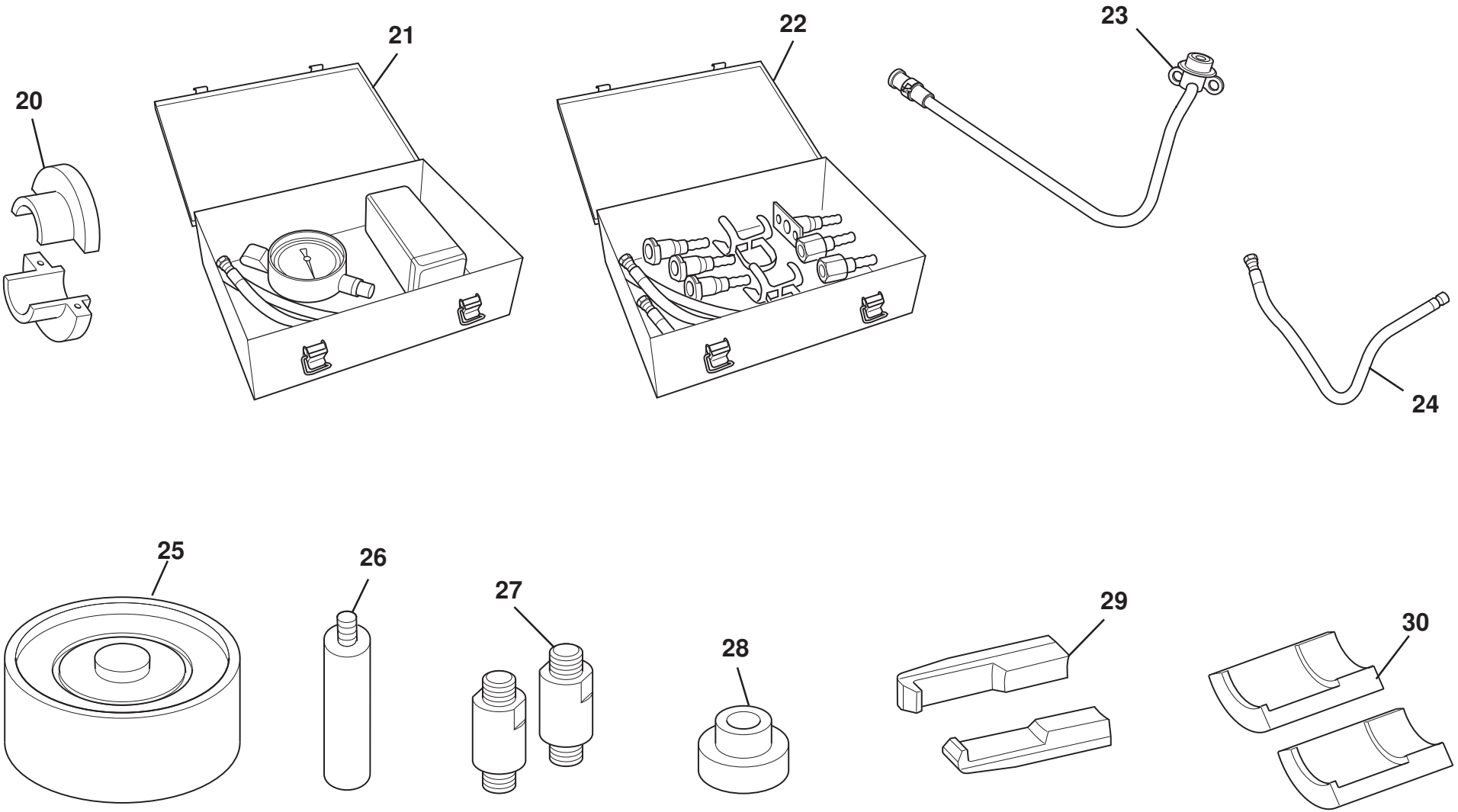

ELISE

60.02 page 2

Function Code 60.02 Special Tools

Dep	Part Description	Remarks	Option	Part Number	Qty
01	Hanger, engine			**T000T1437S**	2
02	Press Tool, driveshaft			**T000T1438F**	1
03	Press Tool, driveshaft bearing			**T000T1439F**	1
04	Bolt, engine hanger			**T000T1440S**	2
05	Oil Filter Wrench			**T000T1441F**	1
06	Valve Clearance Adjuster Set			**T000T1442F**	1
07	Crank Pulley Holding Tool			**T000T1443F**	1
08	Companion Flange Holding Tool			**T000T1444F**	1
09	Oil Seal Puller, transmission			**T000T1445F**	1
10	Differential Pre-load Adaptor			**T000T1446F**	1
11	Upper Plate, 5th/6th gear			**T000T1447/1**	1
12	Bolt, 5th/6th gear puller			**T000T1447/2**	1
13	Arm, 5th/6th gear puller			**T000T1447/3**	3
14	Adaptor, 5th/6th gear puller			**T000T1447/4**	1
15	5th/6th Synchro Puller Hanger			**T000T1448/1**	1
16	5th/6th Synchro Puller Side Arm			**T000T1448/2**	2
17	5th/6th Synchro Puller Bolt			**T000T1448/3**	1
18	5th/6th Synchro Puller Claw			**T000T1448/4**	2
19	5th/6th Synchro Puller Holder			**T000T1448/5**	1
20	Fuel Pipe Release Tool			**T000T1450F**	1
21	Fuel Gauge Kit			**T000T1451F**	1

Function Code 60.02 Special Tools

Dep	Part Description	Remarks	Option	Part Number	Qty
22	Fuel Measure Set			**T000T1452F**	1
23	Fuel Tube Connector			**T000T1453F**	1
24	Fuel Tank Connector			**T000T1454F**	1
25	Driveshaft Seal Tool, LH			**T000T1459F**	1
26	Handle, driveshaft seal tool			**T000T1460F**	1
27	Arm, transmision puller kit			**T000T1462F**	1
28	Attachment, transmision puller kit			**T000T1463F**	1
29	Claw, transmision puller kit			**T000T1464F**	1
30	Adaptor, transmision puller kit			**T000T1465F**	1
31	Tool Board	Not illustrated		**T000T1455F**	1

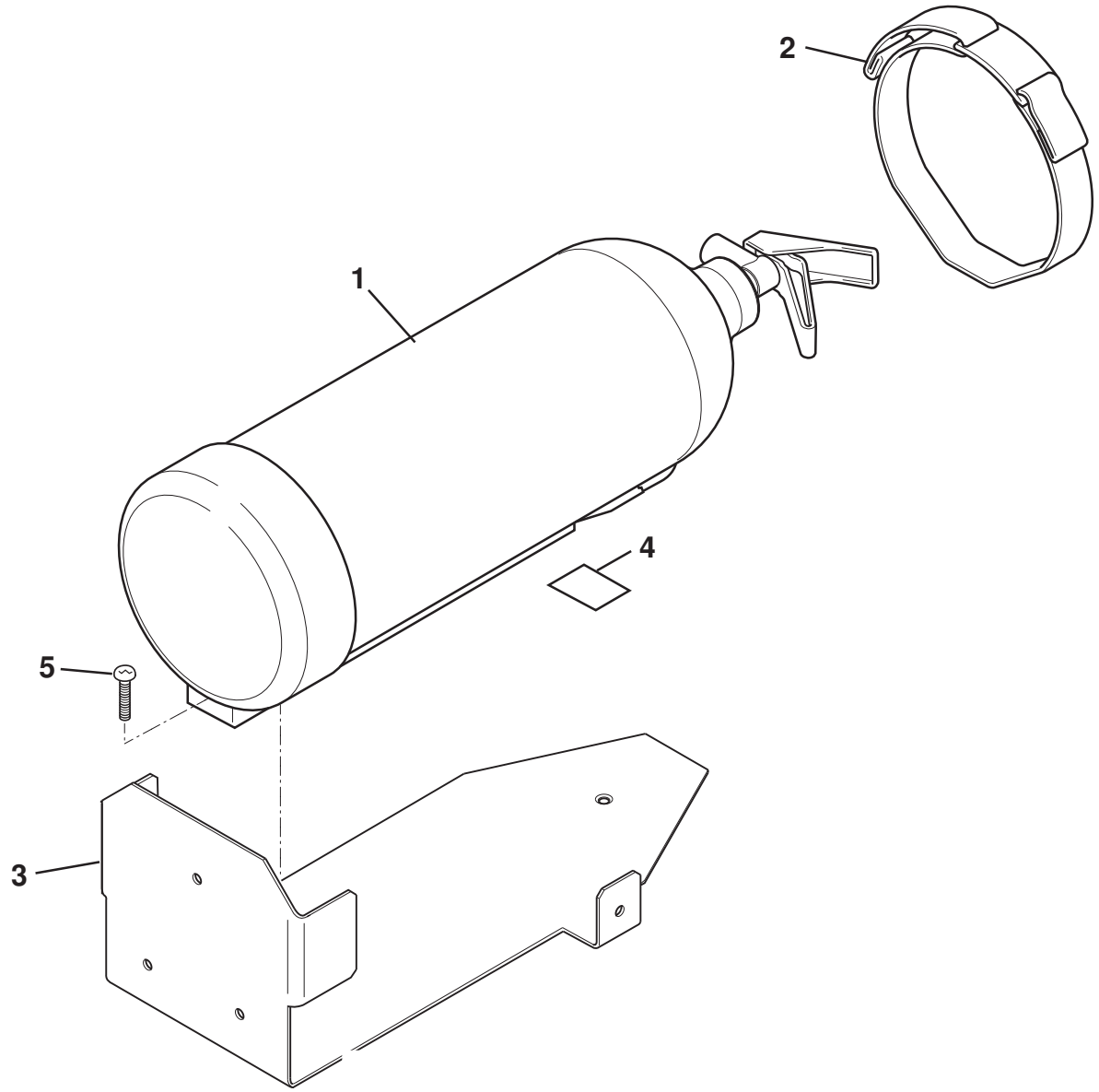

ELISE

60.03

Function Code 60.03 Fire Extinguisher, Gulf States

Dep	Part Description	Remarks	Option	Part Number	Qty
01	Fire Extinguisher, 2 kg, GCC			**A120T6000F**	1
02	Strap Assembly, fire extinguisher retention			**A120U0135F**	1
03	Bracket, extinguisher mounting			**A120B0245F**	1
04	Seal Strip 24 x 75			**A036B6221F**	2
05	Screw M5 x 16, extinguisher to bracket			**A116W5281F**	2

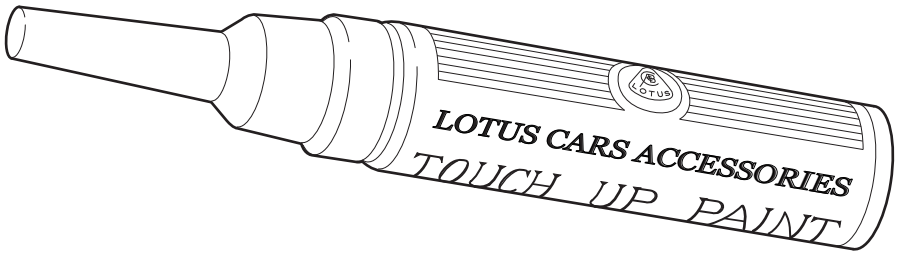

ELISE

80.20a

Function Code 80.20a Touch-in Paint Pencil Range

Dep	Part Description	Remarks	Option	Part Number	Qty
04	B04, British Racing Green, mono			**D082B6146F**	1
20	C20 Classic Blue metallic		Elise 20th Anniversary	**A142B0021S**	1
21	C21 Classic Green metallic		Elise 20th Anniversary	**A120B6097S**	1
25	B25 Chrome Orange			**A082B6338F**	1
25a	C25 Chrome Orange			**A120B6085S**	1
62	C62 Classic Silver metallic		Elise 20th Anniversary	**A142B0022S**	1
75	B75, Motorsport Green			**A120B6086S**	1
83	B83, Lightning Yellow Pearlescent			**A082B6384F**	1
84	B84, Lava Orange Pearlescent			**A082B6385F**	1
86	B86, Racing Green Metallic			**A082B6388F**	1
93	B93. Starlight Black Metallic			**A082B6402F**	1
94	B94, Ardent Red			**A082B6400F**	1
97	B97, Atlantic Blue Metalllic			**A082B6407F**	1
98	B98, Storm Titanium			**A082B6408F**	1
100	B100, Magnetic Blue			**A082B6410F**	1
101	B101, Electric Green Metallic			**A082B6411F**	1
102	B102, Aubergine Metallic			**A082B6412F**	1
104	B104, Blue Mica			**A082B6414F**	1

Function Code 80.20a Touch-in Paint Pencil Range

Dep	Part Description	Remarks	Option	Part Number	Qty
105	B105, Nightfall Blue			**A082B6415F**	1
106	B106, Saffron Yellow			**A082B6416F**	1
106	C106 Classic Yellow solid		Elise 20th Anniversary	**A142B0023S**	1
107	B107, Glacier Blue			**A082B6417F**	1
108	B108, Graphite Grey			**A082B6418F**	1
109	B109, Krypton Green			**A082B6419F**	1
110	B110, Polar Blue			**A120B6040S**	1
111	B111, Motorsport Black			**A120B6045S**	1
112	B112, Motorsport Yellow			**A120B6046S**	1
113	B113, Aspen White			**A120B6028S**	1
114	B114, Solar Yellow			**A120B6029S**	1
115	B115, Arctic Silver			**A120B6030S**	1
116	B116, Autumn Gold			**A120B6031S**	1
117	B117, Canyon Red			**A120B6032S**	1
118	B118, Chilli Red			**A120B6033S**	1
119	B119, Racing Green			**A120B6034S**	1
120	B120, Laser Blue			**A120B6035S**	1
121	B121, Storm Titanium			**A120B6036S**	1
122	B122, Graphite Grey			**A120B6037S**	1
123	B123, Phantom Black			**A120B6038S**	1
124	C124, Sky Blue			**A129B6089S**	1

Function Code 80.20a Touch-in Paint Pencil Range

Dep	Part Description	Remarks	Option	Part Number	Qty
127	B127, Prism Green			**A120B6047S**	1
128	B128, Moonstone			**A120B6048S**	1
129	B129, Ice White			**A120B6049S**	1
130	B130, Arctic Silver			**A120B6050S**	1
131	B131, Persian Blue			**A120B6044S**	1
132	B132, Isotope			**A120B6051S**	1
133	B133, Liquid Blue			**A120B6052S**	1
134	B134, Candy red			**A120B6053S**	1
135	B135, Burnt Orange			**A120B6054S**	1
137	B137, Carbon Grey			**A120B6062S**	1
138	B138, Aquamarine			**A120B6063S**	1
139	B139, Lotus Quartz			**A120B6034S**	1
149	C149, Velvet Red			**A120B6087S**	1
151	C151, Sienna Brown			**A120B6088S**	1
152	C152 Motorsport Black metallic			**A142B0019S**	1
162	C162, Zest Yellow			**A120B6093S**	1
164	C164 Mars Gold metallic			**A142B0020S**	1
168	C168, Formula Red			**A120B6094S**	1
169	C169, Daytona Blue			**A120B6095S**	1
171	C171 Chrome Orange				
173	C173, Toxic Green			**A120B6096S**	1

Function Code 80.20a Touch-in Paint Pencil Range

Dep	Part Description	Remarks	Option	Part Number	Qty
181	C181 Elise Grey			**A142B0003S**	1
183	C183 Solid Red			**A142B0001S**	1
184	C184 Metalic White			**A142B0004S**	1
185	C185 Metalic Grey			**A142B0005S**	1
186	C186 Metalic Black			**A142B0002S**	1
187	C187 Metalic Yellow			**A142B0006S**	1
188	C188 Metalic Orange			**A142B0007S**	1
189	C189 Metalic Blue			**A142B0008S**	1
190	C190 Metalic Silver			**A142B0009S**	1
191	C191 Metallic Racing Green			**A142B0010S**	1
201	C201 Metalic White			**A142B0011S**	1
202	C202 Metalic Blue			**A142B0012S**	1
203	C203 Metalic Racing Green			**A142B0013S**	1
205	C205 Metalic Orange			**A142B0014S**	1
206	C206 Solid Yellow			**A142B0015S**	1
208	C208 Classic Blue		Elise 250 Special Edition	**A142B0024S**	1
209	C209 Classic Yellow		Elise 250 Special Edition	**A142B0025S**	1
210	C210 Classic White		Elise 250 Special Edition	**A142B0026S**	1
211	C211 Classic Red		Elise 250 Special Edition	**A142B0027S**	1